Pick up Balers
219 - 221

OPERATOR'S MANUAL

Pick up Balers
219 - 221

OMCC15640 H2 (ENGLISH)

John Deere Arc-Lès-Gray

European Version

Printed in U.S.A.

To the Purchaser

The purpose of this manual is to acquaint you with your new time John Deere pickup baler, and to help that you receive the service built into it. For proper operation, maintenance and service procedures read this manual carefully. In this way, best results will be obtained. Our products had been thorouhly inspected and tested before leaving the factory. Your baler will give you long and efficient service, if given proper care at regular intervals. Clean it frequently and shelter it in a dry place, or cover it with waterproof canvas if left outdoors. DO NOT NEGLECT LUBRICATION. After reading this manual, make yourself familiar with location and purpose of all controls, before a first attempt to operate the new baler.

The machine has been carefully shielded to prevent accidents. Maintain good condition of all safety shields and keep shields always in place. Be sure the baler is securely hitched to the tractor during field operation and transporting. Do not service or lubricate the baler, nor adjust tension of roller chains before all power has been disengaged and the flywheel has stopped rotation.

When ordering parts, give your dealer the Serial Number of your baler. A factory label indicating the serial number is located to the left hand inside the twine box. For ready reference record the serial number in the space below.

Date of purchase . . . . . .

Serial number . . . . . .

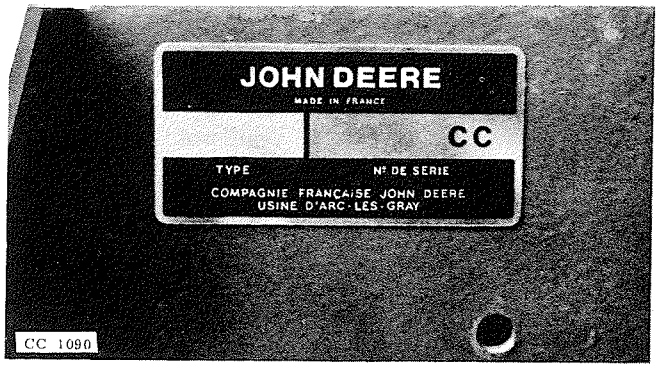

Contents

	page
IDENTIFICATION VIEWS	
219/221-type balers	1
OPERATION	2-11
Preparing the baler	2- 5
Starting field operation	5- 8
How the knot is tied	8- 9
Machine protective devices	10
Safety suggestions	10
Threading needles	11
Storage	11
Preparation at the beginning of season	11
LUBRICATION	12-13
SERVICE	14-21
Service checking	14
Adjustments	14-21
TROUBLE SHOOTING	22-28
Knotter difficulties	22-26
Bale not of proper weight	26
Bale not uniform	26
Pickup difficulties	27
Feeding difficulties	27
Shear bolt difficulties	27
Safety slip clutch difficulties	27
Powershaft difficulties	28
EQUIPMENTS	29-31
SPECIFICATIONS	32

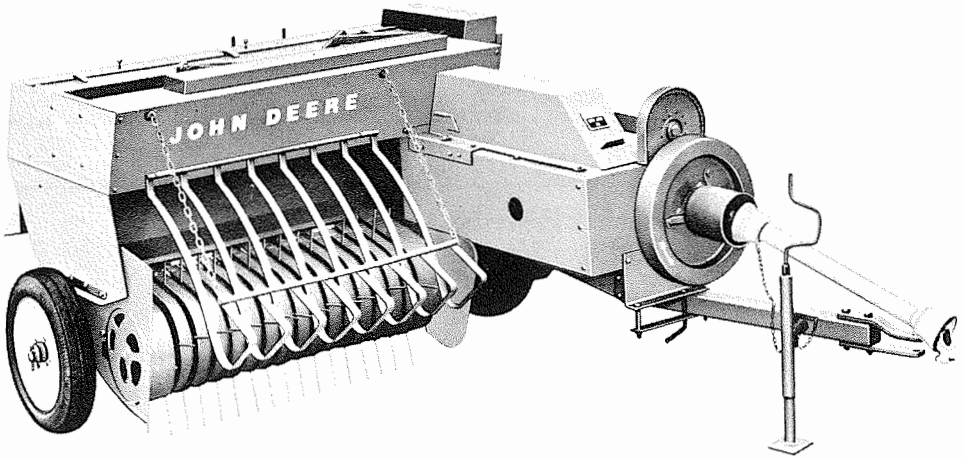

CC 1066

Front view of John Deere 219 pickup baler

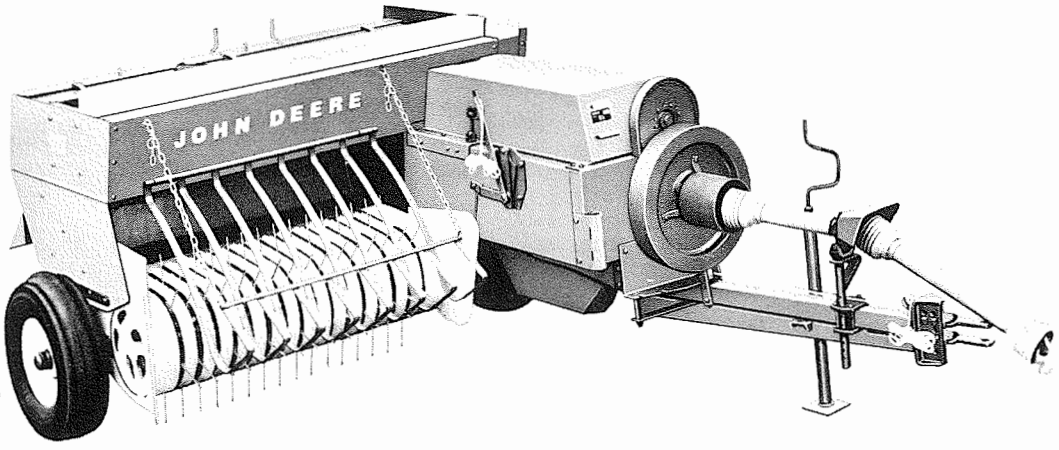

CC 1067

Front view of John Deere 221 pickup baler

Operation

PREPARING THE BALER

HOOKUP INSTRUCTIONS (219 Baler)

Connect baler to tractor so that baler frame is approximately level. For this purpose back the tractor on level ground up to the baler and determine the required position of hitch plates on the baler tongue in relation to the tractor drawbar. The hitch plates may be mounted to the tongue in two different ways (A and B) as shown in fig. 1.

After securing hitch plates on tongue in required position, hitch baler to the tractor drawbar.

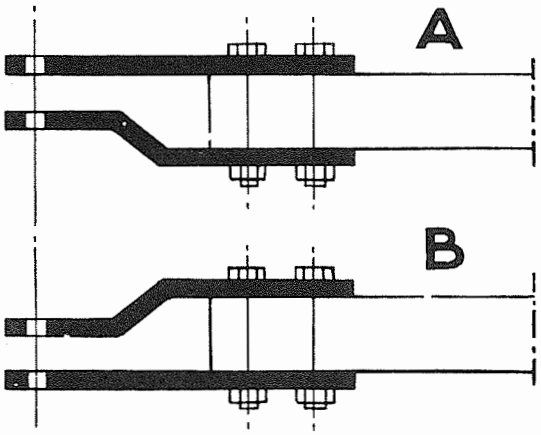

Fig. 1 - Positioning of hitch plates

For best operating conditions of the powershaft, the distance from the end of the power take-off shaft to the hitch pin hole in the drawbar must be adjusted within 13.7 to 21.6 in. (350 to 550 mm). Make sure the drawbar hitch pin hole is vertically aligned with the center line of the power take-off shaft. It may be necessary to modify the tractor hitch in order to meet these specification or damage to universal joints may result.

CAUTION: Right-hand turns are limited by powershaft operation. If possible, avoid right-hand turns during field operation or keep turns within reasonable limits to prevent the universal joints from being damaged.

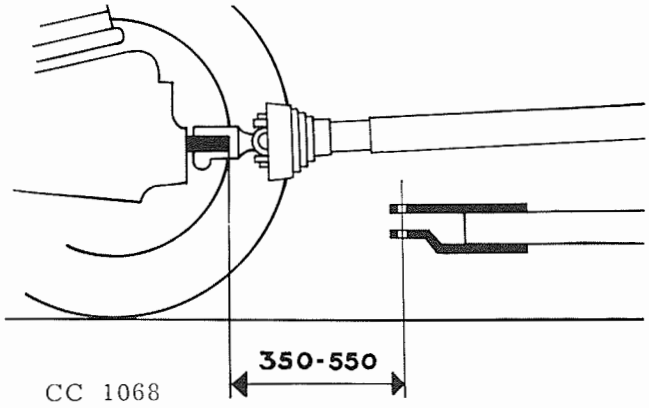

Fig. 2 - Hitching the baler to tractor within 13.7 to 21.6 in. (350 to 550 mm)

221 BALER

Make sure the frame of the baler is approximately level when hitching the baler to the tractor drawbar. Back the tractor on level ground up to the baler and determine the required position of hitch plates on tongue which can be lowered or raised as necessary, see fig. 3.

After securing the hitch plates on tongue in required position, hitch baler to the tractor drawbar.

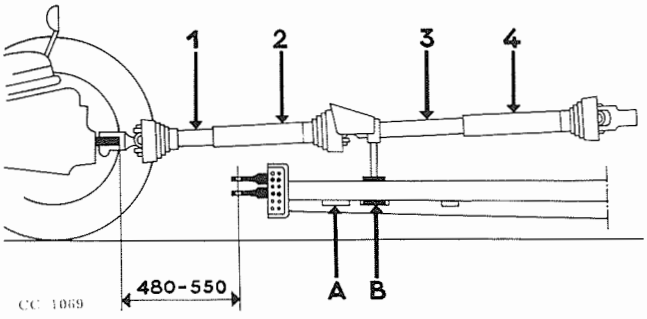

Fig. 3 - Hitching the baler within 18.8 to 21.6 in. (480 to 550 mm)

For best operating conditions of the powershaft, the distance from the end of the power take-off shaft to the hitch pin hole in the drawbar must be adjusted within 18.8 to 21.6 in. (480 to 550 mm). Make sure the drawbar hitch pin hole is vertically aligned with the center line of the power take-off shaft.

It may be necessary to modify the tractor hitch in order to

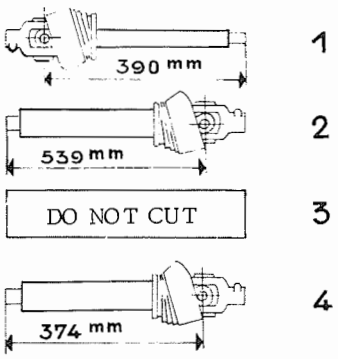

Fig. 4 - Lengths of U-joint shafts
15.3 in. (390 mm)
21.2 in. (539 mm)
14.7 in. (374 mm)

1) When hitching the baler to the tractor within 18.8 to 21.6 in. (480 to 550 mm) do not cut off the U-joint shafts. Attach the support on tongue at B (see fig. 3).

2) When the hitching distance measures 13.7 in. (350 mm) the U-joint shafts 1, 2 and 4 on the baler side (see fig. 5) must be cut off to lengths as shown in fig. 4. The original lengths of the different shafts are: shaft 1 (DC 14441) 24.6 in. (625 mm), shaft 2 (DC 14466) 23.9 in. (609 mm), shaft 3 (AC 12645 CX - AC 12643 CX) is to be used with original length, shaft 4 (DC 14667) 15.9 in. (405 mm). AFTER LOCATING THE SUPPORT AT "A", ASSEMBLE POWERSHAFTS AS SHOWN IN FIG. 5.

When hitching the baler, make sure power take-off shaft on tractor is in straight line with powershaft on baler seen from top.

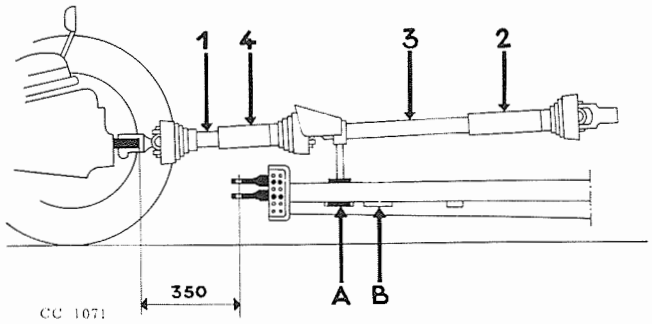

Fig. 5 - Hitching the baler at 13.7 in. (350 mm) distance

MOUNTING THE POWERSHAFT

Connect tongue F to tractor using a drawbar pin hole which is in line with tractor PTO shaft P.

Attach support S to inner side of baler tongue, when facing the pickup.

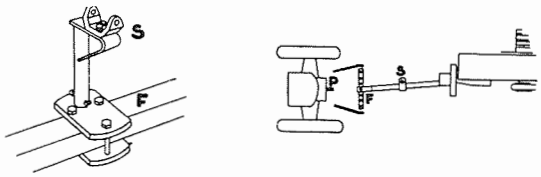

Fig. 6 - Support S attached to inner side of tongue

When hooking up to a tractor with wide wheel tread, use a pin hole on tractor drawbar located to the right of the PTO shaft P for connecting the baler tongue F.

In this case attach support S to outer side of baler tongue.

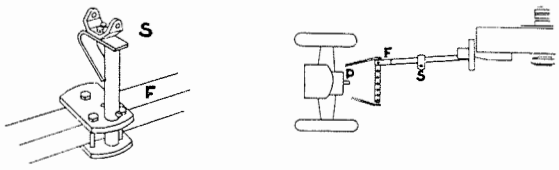

Fig. 7-- Support S attached to outer side of tongue

Seen from the top and seen from the side, the PTO shaft and the U-joint shafts should be arranged in as straight a line as possible. Before starting operation, inspect thoroughly the baler for foreign objects left inside the baler that may cause damage to moving parts. Turn the tractor to right as sharp as possible. (The limit of a right-hand turn is reached, when the baler tongue clevis contacts the tractor drawbar, or telescoping powershafts are closest togehter). Now engage gently the tractor PTO shaft and watch for irregular sounds from near the flywheel. If necessary, lower the support till ALL NOISE IS GONE.

If the baler is attached to a swinging drawbar, the left-hand turn is limited by the tongue striking the tire. Avoid such sharp turns during field operation, and do not wait until noise indicates the danger. This will protect moving parts from serious damage.

BEFORE STARTING OPERATION

The degree of satisfaction given by these balers is directly dependent upon the care given by the operators. Once the balers have been adjusted to meet the crop condition, the rest is up to the operators.

These balers are built to handle a wide range of conditions. Field conditions vary from year to year, and even from day to day. Different varieties of crop present different baling problems. A careful study of the adjustments on these balers and of the results obtained under different conditions will allow to earn the many benefits that these balers can provide. Before starting a baler in the field, be sure you are thoroughly acquainted with the function of each working unit. Study the illustrations and appertaining instructions carefully. Keeping them in mind you will achieve the best results.

INSPECTING THE BALER

The tension of belts and chains, tightness of bolts and the adjustment of the pickup balancing spring have been checked by the dealer prior to delivery. Inspect all chains and belts periodically for proper tension and make sure that all bolts are tight. Such inspections are very important during the first hours of operation when all parts gradually break-in and chains and belts often yield.

Perform the following procedures the first time under guidance of an experienced mechanic:

LUBRICATION

Be sure your baler has been lubricated before starting field operation according to the lubricating instruction on page 12. Check oil level in main gear case.

NOTE

Remove all grease and dirt from bill hooks and twine disks, or misses in tying will occur.

LOADING THE TWINE BOX

Use only good quality twine which runs 275 feet per pound (185 m/kg).
When baling at lower densities, twine of 327 ft/lb (220 m/kg) may be strong enough.
Place one twine ball in each compartment of the twine box. Join the two balls A and B by tying the inside twine end of ball A to the outside twine end of ball B. In joining the twine use a secure square knot. The loose ends of the twine should be trimmed as close to the knot as possible. Join twine balls C and D in the same manner.

THREADING THE TWINE

Thread the inner end of twine ball B through its respective guides as shown in fig. 8.

IMPORTANT

The needles must be threaded one by one. Proceed as follows:

1) Threading the right-hand needle:
- through guide 1D
- tension clip PD
- guide 2D
- eye 3
- pipe 4
- eye 5

With needles in "home" position continue threading, and
- run the strand of twine below needle guard 6
- eye 7D and guide 8D on tip of needle

IMPORTANT

Twine must be threaded over guide on tip of needle.

Run sufficient length of twine between needle frame and bale case and fasten it around bale case adjusting crank.

2) Thread left-hand needle by running twine the following way:
- through guide 2G
- tension clip PG
- eye 3
- pipe 4
- eye 5
- below needle guard 6
- eye 7 G
- guide 8G on tip of needle

Trip the knotter mechanism by turning the bale measuring wheel.

Then turn the flywheel by hand in the normal sense of rotation. Continue turning the flywheel until needles are all the way up. Twine is hold in twine disk, and needles returned to "home" position.

Remove twine strands which were temporarily secured to the bale case adjusting cranks.

The twine is now ready for baling operation.

When threading needles in the field, disengage tractor PTO shaft and make sure flywheel is not moved during threading procedure.

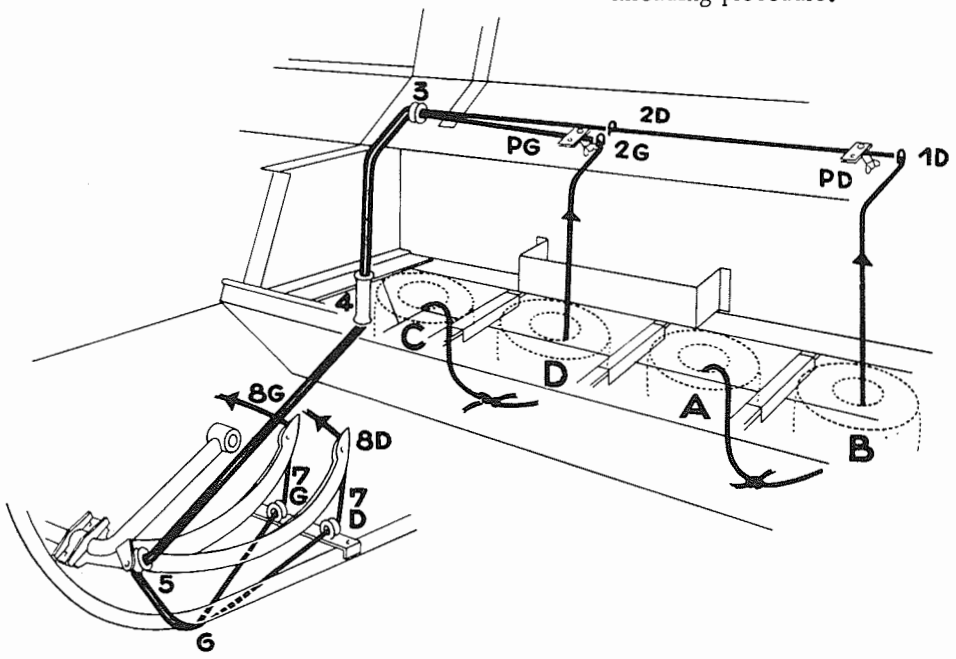

Fig. 8 - Twine location after threading

CAUTION: Accidents may occur, when threading twine with flywheel is running. See safety suggestions on page 10.

RUNNING THE BALER BY HAND

Turn the flywheel by hand in the normal sense of rotation to perform several complete tying cycles. Start each tying cycle by turning the bale measuring wheel until trip dog is released and the adjustable stop on release lever arm rests on the measuring wheel shaft sheave.

Remove excess paint, wash the bale measuring mechanism with kerosene and apply oil to joints, if they do not freely move.

BREAKING IN THE NEW BALER

The new machine should be given an empty running "breaking-in" period of at least one hour. After a short run at slow idling speed, stop machine and inspect it completely by making a check for good knotter operation, loose bolts, chain and belt tension.

Be sure bearings are not excessively heated. Run the baler at slow idling speed for the first thirty minutes and increase to full speed for the rest of the "breaking-in" period.

IMPORTANT

Never apply brakes on tractor during stationary operation, neither when baling, nor when running the machine idle.

Adjust plungerhead after baling the first 1000 bales (see page 14), and thereafter when necessary depending on operating conditions.

STARTING FIELD OPERATION WITH THE NEW BALER

CROP PREPARATION

For best baling results, follow the below given instructions. They will help to avoid crowding the baler beyond its capacity as well as eliminating shock loads causing undue wear of parts.

WINDROWS

The windrows should be of regular shape and of moderate size, about three feet (1 m) wide at their base. The material in small windrows will become uniformly dry. Light windrows would not penetrate into the stubble. This permits a vertical aeration which is essential after rain falls.

Therefore, avoid voluminous windrows, especially when baling copius crops. With small windrows, closely spaced, it will be nearly impossible to overload the baler. Thus, a normal working speed can be maintained and bales of perfect shape will be obtained.

STORAGE OF BALES

To keep the baled hay in good conditions store the bales in rows, spaced by few inches. Arrange the rows of the next layer at right angles to the rows of the layer below. This will enable the air to circulate between rows.

OPERATING SPEED

Be sure tractor PTO shaft is turning at 540 rpm under load. The plungerhead should then make 83 strokes per minute.

Start field operation by driving in low gear in order to familiarize yourself with the function of the baler and its baling capacity. You shall soon realize, if the ground speed corresponds to given windrow size. Shift to higher gear but do not alter the engine speed to increase the ground speed, or increase the size of the windrows until good sized charges are fed into the compression chamber without straining the feeding and baling mechanisms.

The capacity of the baler depends upon such factors as material characteristics, ground conditions, condition of tractor, and the judgement of the operator.

Do not crowd your baler by excessive charges. Be sure the baler is never operated below its rated speed of 88 strokes per minute.

Rough ground conditions may require judgement on the part of the operator to adjust the size of the windrows and the speed of the machine to obtain best performance.

When starting with an empty bale case, the first bales will be light and their length will be irregular until the compression of the material has been sufficiently built up to turn the bale measuring wheel positively. Do not care about this.

The twine coming out of the twine box should move with each stroke of the plungerhead. If it stops moving, the twine has run out or has broken.

It is essential to clean out periodically accumulated chaff and trash from around the twine knotting mechanism. In most haying conditions this accumulation will not affect the operation of the baler. If material is high in moisture content or gummy or if accumulations get wet, it may cause the tying mechanism to function inaccurately, resulting in broken parts or untied bales.

CROWDING THE BALER

Under difficult haying conditions, or if the operator overcharges the baler, unexpected crowding and sudden stops may occur.

This will have the following results:
- the safety slip clutch will slip, or
- the pickup drive belt will slip, or
- the flywheel shear bolt will shear.

Wait until the flywheel has stopped rotating before servicing the baler. Remove all accumulated material from the pickup cylinder and feeder teeth area.

Then moderately tighten the pickup drive belt and set plungerhead to dead center position. Remove material from knives and from front portion of the bale chamber. Be sure no objects are blocking moving parts. Then start baler motion roughly.

IMPORTANT

Whenever replacing a sheared flywheel shear bolt, grease the flywheel bearing (see lubrication chart on page 12).

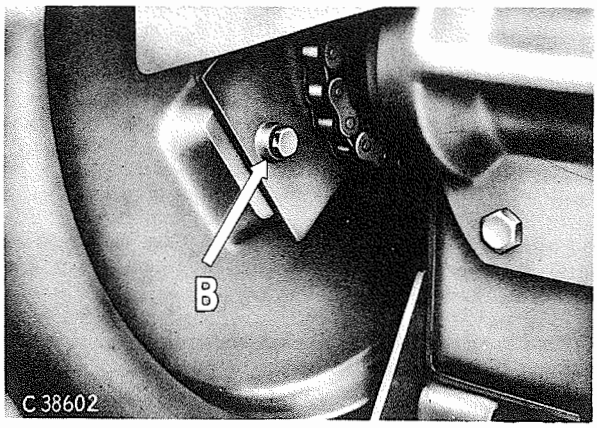

Fig. 9 - Flywheel shear bolt

Tighten lock nut on shear bolt. Prevent shear bolt from turning when tightening the nut, using a second wrench.

WORKING HEIGHT OF PICKUP TEETH

Set working heigth of the pickup teeth as low as possible, enabling them to pickup all the crop without touching the ground.

CAUTION:

Pickup teeth run the risk to break if they penetrate into the ground. They will then also pick up stones which may cause breaking of moving baler parts.

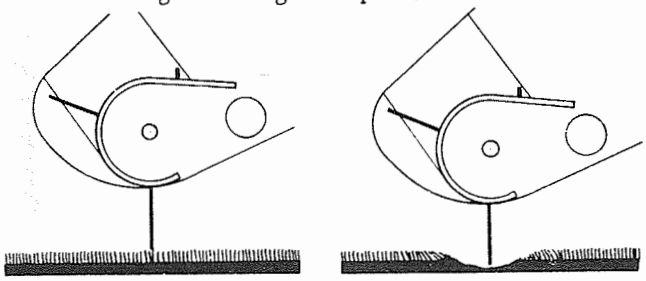

Fig. 10 - Adjusting working height of pickup teeth

BALER 219

Adjusting the working height is made by means of the pickup lift lever located to the side of the bale chamber between gear box and wheel.

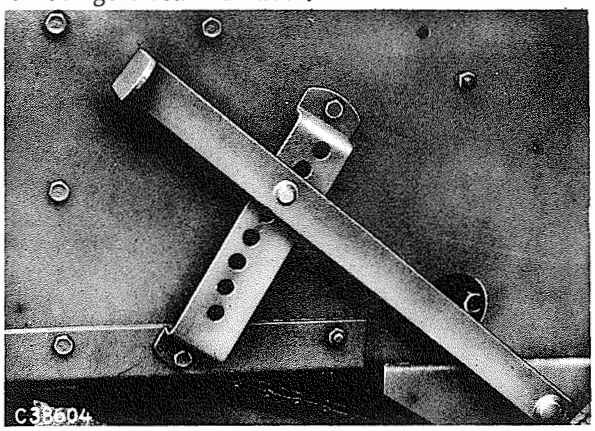

Fig. 11 - Pickup lift lever

BALER 221

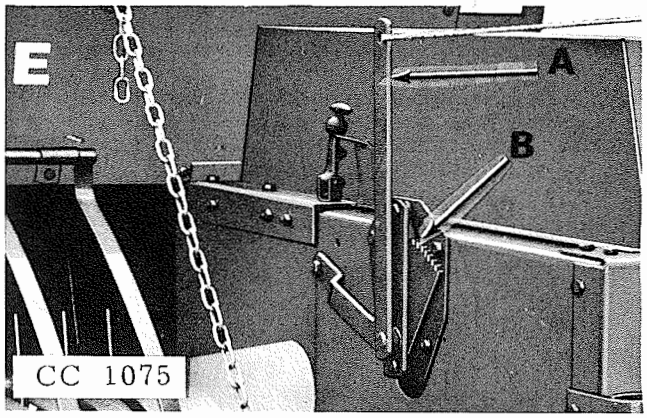

Fig. 12 - Pickup lift lever

The lever rack B allows pre-selecting the operating position of the lift lever A. Applying the pre-selection to highest position, the pickup is secured for transporting.

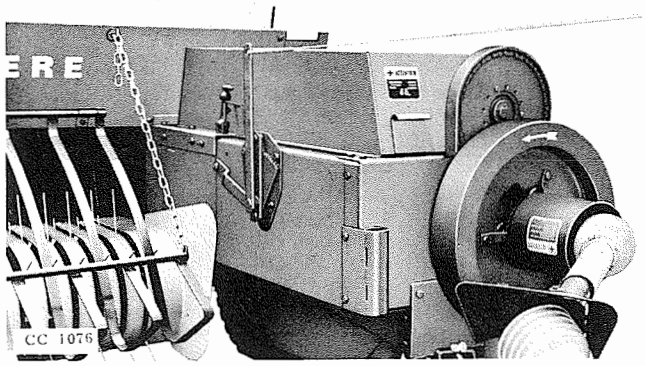

Fig. 13 - Pickup adjustment controlled from tractor seat

With pickup working height pre-selected, use control rope from tractor seat to raise the pickup as necessary to pass over obstacles on the ground. Pull the rope all the way to reset the pickup to pre-selected working height.

ADJUSTING THE PICKUP COMPRESSORS

Height of compressors is adjusted by means of chains C. Adjust height according to volume and weight of the crop. Raise compressors in heavy crop conditions, lower them when crop is fluffy.

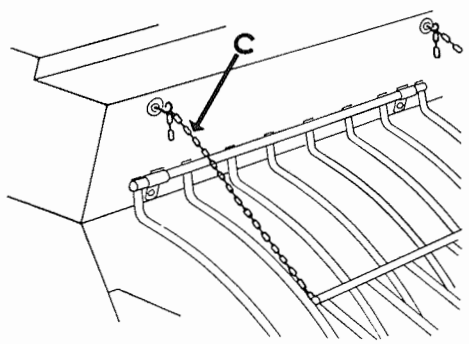

Fig. 14 - Pickup compressors

ADJUSTING LENGTH OF BALES

The length of bales is adjustable between 1 and 4 feet (0.30 and 1.20 m). Adjust the stop A on the measuring wheel control arm B up or down for the desired length. Raise the stop to obtain long bales, or lower the stop to shorten bale length.

Irregular length bales are caused by lack of material density in the bale case where the material is not sufficiently compressed to turn the bale measuring wheel C positively.

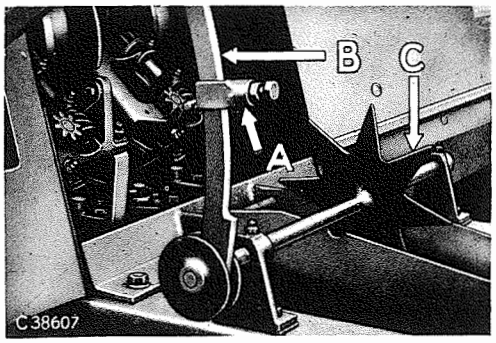

Fig. 15 - Bale measuring arm

Lack of density may also result, when the ground speed is too low. Depending on prevailing conditions, this may be remedied by increasing the ground speed, increasing the size of the windrows or by tightening the tension cranks (Fig. 16).

Do not carry these measures too far because bales, that are too dense or too heavy cause excessive strain on the baler. This would then constribue to undue wear and breakage of parts or twine.

DENSITY OF BALES

Bale weights depend upon the tension applied to the bale chamber. Tension is changed by adjusting the two cranks A on the outlet of the bale chamber. Bale weights are affected by the size of windrows, moisture content, and quality of the hay; therefore, bale weight should be checked frequently during the day. This helps avoiding overcharging and damaging the baler.

IMPORTANT: Loosen bale tension cranks at the end of each day s operation, thus eliminating troubles, whenever baling operation is continued.

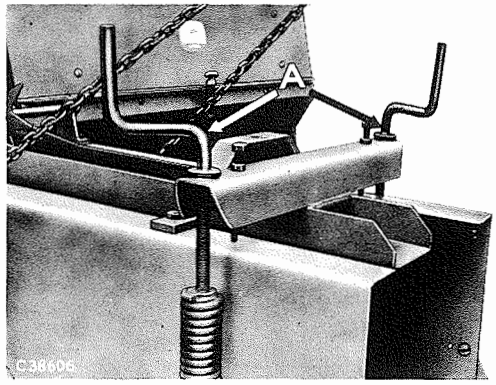

Fig. 16 - Tension cranks on the rear of the bale chamber (219/221 balers)

JACK STAND (221 balers)

During operation, the jack stand is stored on the front end of the bale chamber by means of a bracket.

When unhitching the baler, apply the jack stand to an opening provided on tongue. Raise tongue and pull the hitch pin.

The baler may be hitched again by backing up the tractor until tractor drawbar located between tongue hitch plates and hitch pin holes are aligned to receive the hitch pin. Secure hitch pin, lower tongue, remove jack stand and store it on baler.

JACK STAND (219 balers)

Raise or lower the tongue hitch plates by means of the jack stand, until they match in height with the tractor drawbar.

Back up the tractor to place its drawbar between hitch plates on baler tongue. Install and secure hitch pin.

After the baler has been hooked up, turn jack stand to shortest length, pivot jack stand into horizontal position and secure it with latch pin.

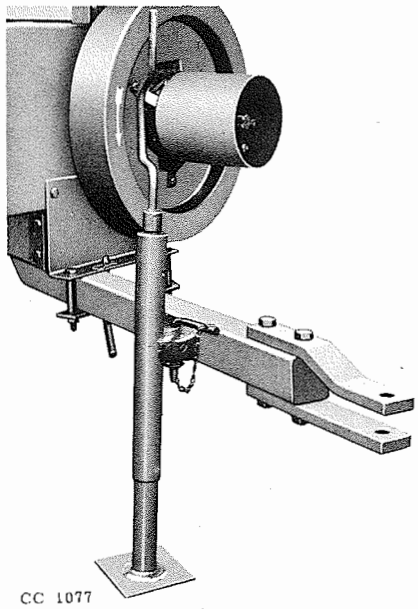

Fig. 17 - Jack stand (219 baler)

BALER TONGUE (219 balers)

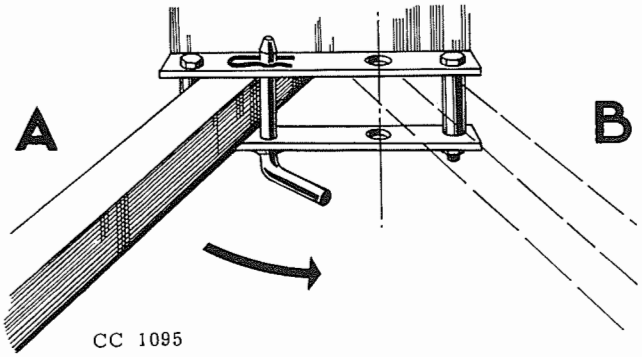

Fig. 18 - Positioning the baler tongue

Transporting and operating positions of the tongue are easily obtained by pivoting the tongue. Remove locating pin, pivot tongue to desired position and secure with locating pin and spring locking pin.

BALER TONGUE (221 balers)

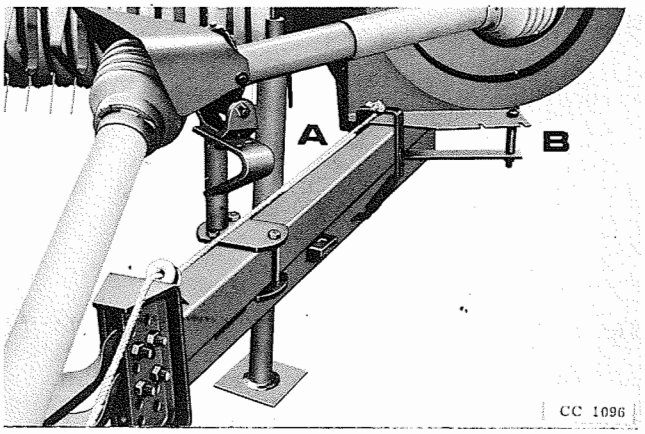

Fig. 19 - Positioning the baler tongue

Transporting and operating positions are obtained by means of a control rope without leaving the tractor seat. Unlock the tongue by pulling the rope and moving the tongue to the right or to the left with the tractor. Lock the tongue in desired position by releasing the rope.

NOTE: Call your local JohnDeere dealer, if your baler needs servicing or refer to page 14 and follow checking procedures as outlined.

HOW THE KNOT IS TIED

To get a better understanding of the operation of your baler and the importance of the various adjustments dealt with in this manual, an understanding of the tying cycle of the baler is important. This illustrates and describes the knotter action at various stages of one complete knot formation.

Fig. 20

1) After the needle has been threaded, the end of the twine is held in the twine disk A by the twine holder B. As the bale is formed, the twine is pulled from the twine box around the bale.

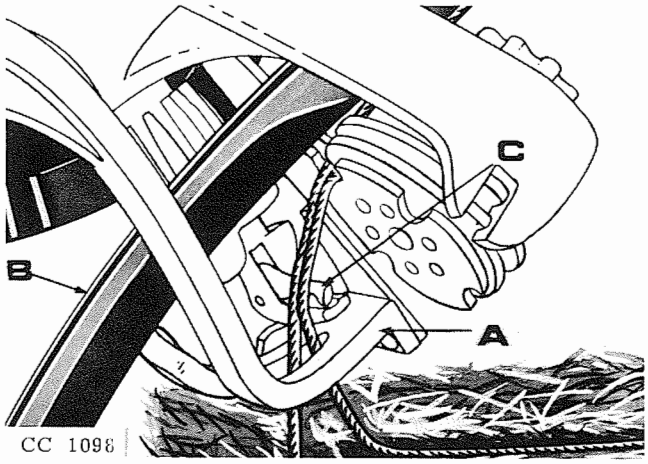

2) When the bale reaches its proper length, the measuring wheel trips the tying mechanism and the needle B with the help of the tucker finger brings the second strand of twine through the guide on the knife arm A across the bill hook C and into the twine disk.

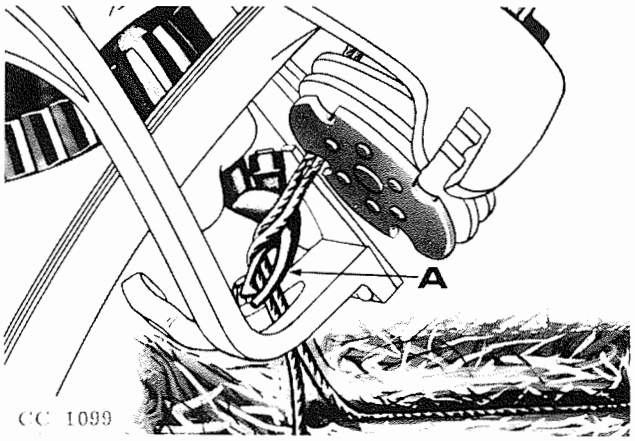

Fig. 22

3) The bill hook A starts its revolution when the gear teeth on the intermittent knotter gear have operated the disk driving pinion and turned the disk sufficiently to permit the twine holder to secure both strands of twine in the disk.

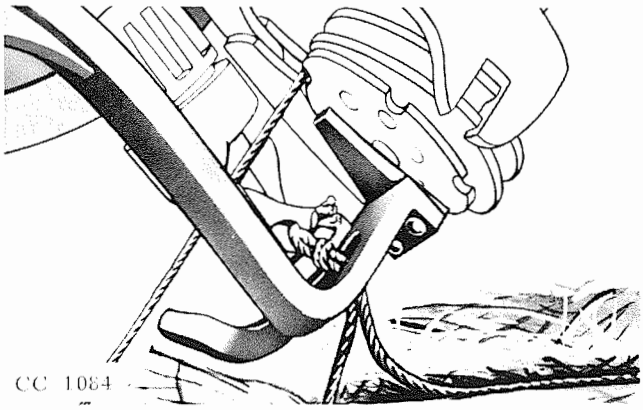

Fig. 23

4) As the bill hook turns forming a loop of twine around the hook A, the jaw opens to receive the twine. The knife B advances ready to cut the twine between the bill hook and the disk C.

NOTE: At this stage, the needle begins to recede, leaving twine in the disk which will be held there for the next knot.

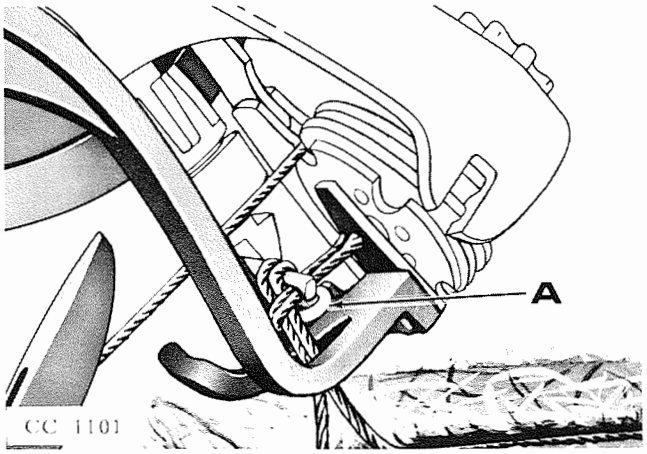

Fig. 24

5) The bill hook jaw has closed and now holds the ends of the twine tightly. The twine has been cut and the wiper A on the knife arm advances to wipe the looped twine from the outside of the bill hook as the jaws hold the two cut ends of twine preparatory to complete the knot.

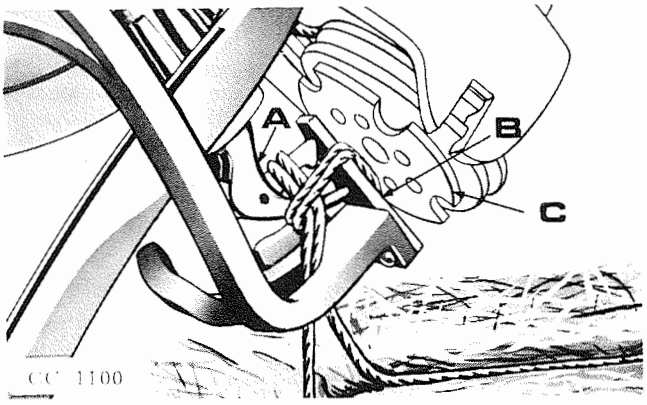

Fig. 25

6) The knot is tied and drops from the bill hook which completes the tie around the bale. The needles then return to the "home" position leaving the strand of twine in the disk. This strand extends through the bale chamber ready to receive material for the next bale at the end of which another tying cycle will be performed.

MACHINE PROTECTIVE DEVICES

SLIP CLUTCH

The slip clutch helps absorbing the impact stress caused by the reciprocating movement of the plungerhead. In this it is protecting the complete power train, including PTO shaft and universal joints from undue shocks. The clutch normally will slip, before the shear bolt shears, when the baler becomes overcharged by crowding. The clutch slip torque must be adjusted to maximal 200 ft.lb (28 mkg).

OVERRUNNING CLUTCH

A free wheeling device is built into the power line on the input side of the gear box. If the tractor engine is suddenly stopped, the overrunning clutch allows the baler to continue its rotation, thus preventing the flywheel inertia from back driving the tractor engine.

FLYWHEEL SHEAR BOLT

The special shear bolt in the flywheel will shear if the plungerhead becomes blocked during operation.

FEEDER TEETH

The feeder teeth made of wood fibre board, mean an additional baler protection. If for some reason the teeth interfere with the plungerhead, they will break without causing other damage. Replacing the teeth is easily and quickly done.

CONTROLLED TRIPPING OF KNOTTER MECHANISM

A locking device prevents the knotter mechanism from being tripped at any undue moment. Trip dog action is only possible when the plungerhead reaches a certain position. For the rest of plungerhead travel, the needles are automatically secured in "home" position. In this way, an unexpected start of needle movement is eliminated.

PLUNGERHEAD SAFETY STOP

The plungerhead safety stop helps protect the needles from damage, if - for any reason - the needles should remain in the bale chamber. The flywheel shear bolt will shear when the plungerhead is stopped by the safety stop.

PICKUP BALANCING SPRING

The pickup balancing spring protects the pickup from damage which could result from striking stones or other objects in the field.

NOTE

During stationary operation it is necessary to remove frequently all accumulated material from underneath the baler which may affect the needle travel. Also clean out periodically accumulated chaff and trash from needle slots and hay dog slots - especially when the material is high in moisture content.

DISENGAGE PTO SHAFT WHENEVER SERVICING THE BALER

SAFETY SUGGESTIONS

The safety of the operator was one of the prime considerations that John Deere engineers had in mind when designing the machines. Shields and other safety features were built into the machines wherever it seemed to be necessary. Be sure shields and guards are always in place during operation.

However, the best safety device is a CAREFUL OPERATOR. Consider well all safety suggestions given in this manual. Make sure that others operating this machine consider them too.

NEVER ADJUST, SERVICE, GREASE OR CLEAN THE MACHINE DURING OPERATION.

THREADING THE NEEDLES

1. Disengage power from PTO shaft by shifting PTO lever to zero. Depressing the clutch pedal only is a dangerous praxis for stopping baler motion.

2. Wait until flywheel stops rotation completely.

3. Be sure measuring arm is secured in basic position as shown by a decalcomania on baler side.

4. Pull out twine from twine box and thread twine through respective eyes.

5. Lying on your back underneath the baler, thread needles with your head in direction of forward travel.

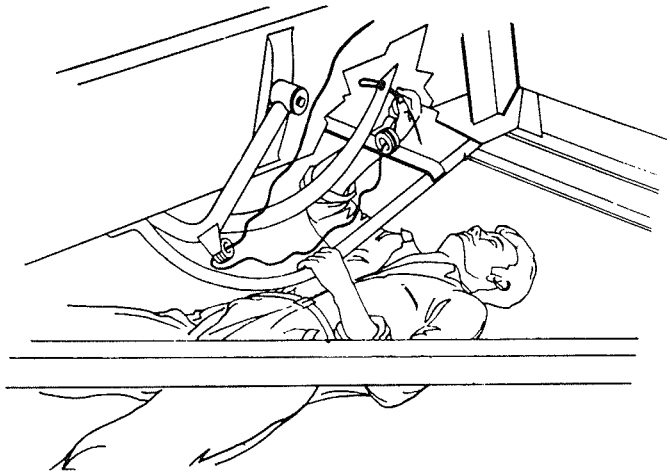

Fig. 26 - Threading needles

STORAGE

Your baler should be taken to an authorized John Deere dealer to be overhauled at the end of each season, in order to assure proper operation at the beginning of the next season.

1) Shelter the baler in a dry place.

2) Clean the baler thoroughly inside and out. Trash and dirt will draw moisture and cause rust.

3) Clean out the knotter mechanism and apply a coating of grease.

4) Grease the machine thoroughly according to the lubrication charts on pages 12 and 13.

5) Paint all parts from which the paint has been taken off except the inside of the bale case, bill hooks, and the twine disks. These parts should be brushed with grease. Lubricate plungerhead guides (see lubrication chart on page 12, item 14).

6) Clean all chains without removing them. Coat chains with grease.

7) Block up baler under axle for taking load off tires. Cover tires with a canvas to protect them from light, grease and oil. Do not deflate tires.

8) Order replacement parts in time. This will allow your dealer to recondition the baler during slack period, thus avoiding delays next baling season.

PREPARING THE BALER AT THE BEGINNING OF EACH SEASON

1) Remove the grease from the knotter mechanism.

2) Remove grease and oil from the chains and the bale case.

3) Lubricate complete machine; this will force any collected moisture out of the bearings.

4) Check air pressure in tires.

5) Drain and flush the gear case and refill to proper level with SAE 140 Regular-Type Gear Lubricant.

6) Make sure that all bolts and set-screws are tight.

7) Check timing of entire baler and, if necessary, adjust as described in this manual.

8) If any major moving parts have been replaced, these should be run in.

Lubrication

Long life and efficient operation of the machine essentially depends upon regular and proper lubrication.

Only use of high-grade lubricant brands is recommended. This will prevent you from spending money unnecessarily.

Keep lubricants stored in closed containers. This will protect them from being contaminated by dust or sand which may cause damage to vital baler parts.

Clean grease fittings and wiped off paint before using the grease gun. Make sure that grease is positively penetrating into bearings.

It is necessary to clean the chains periodically. Apply kerosone to chains and brush off all dirt. Dry chains up and coat them with motor oil using a brush.

Check oil level in gear case by removing the check plug. If necessary, fill SAE 140 Regular-Type Gear Oil to check plug level.

LUBRICATE EVERY DAY

1, 5 Feeder teeth shafts
3, 7 Oil feeder teeth pivot pins
6 Oil wooden guide pads
8 Right-hand and left-hand plungerhead bushings
13 Pickup cylinder cam
14 Oil plungerhead guides
17 Shaft of knotter drive gear and return cam
18 Clutch ring gear
19 Twine disk shaft
20 Knotter frame
21, 22 Shaft of twine disk drive gear
23, 24 Bill hooks
25 Right-hand bearing of knotter drive shaft
27 Head of needle lift link
28 Lower bushing of needle lift link
29 Right-hand bushing of needle frame
30 Oil cam followers
31 Left-hand bearing of measuring wheel shaft
32 Left-hand bushing of needle frame
33 Right-hand bearing of measuring wheel shaft.

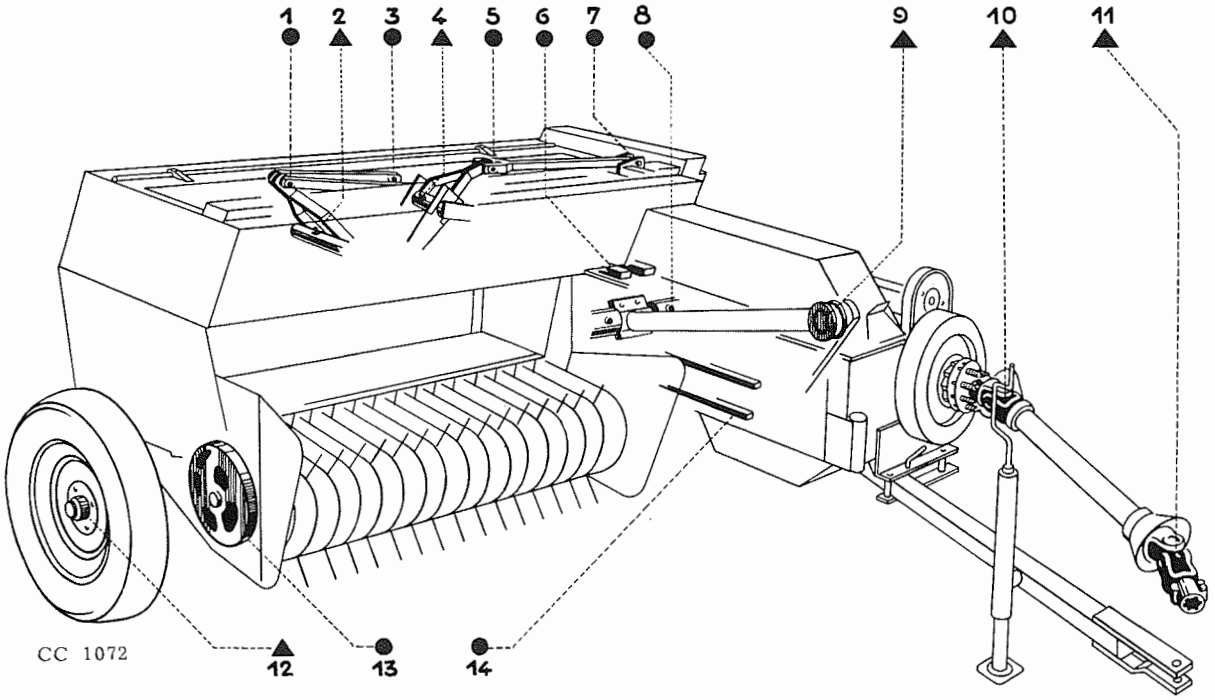

Fig. 27

EVERY WEEK

2, 4 Feeder teeth spacers
9 Pitman bearing
10 Rear universal joint
11 Front universal joint (without auxiliary U-joint shaft).
Center universal joint (with auxiliary U-joint shaft)
12 Hub of right-hand wheel
15 Flywheel
16 Check oil level in gear case.
Fill SAE 140 Gear Oil (8 1/2 pints = 4 litres)
26 Hub of left-hand wheel
34 Hollow shaft of plungerhead safety stop
35 Fulcrum pin of auxiliary U-joint shaft
36 Front universal joint (with auxiliary U-joint shaft)

IMPORTANT

Grease flywheel bearing (key 15) whenever replacing flywheel shear bolt.

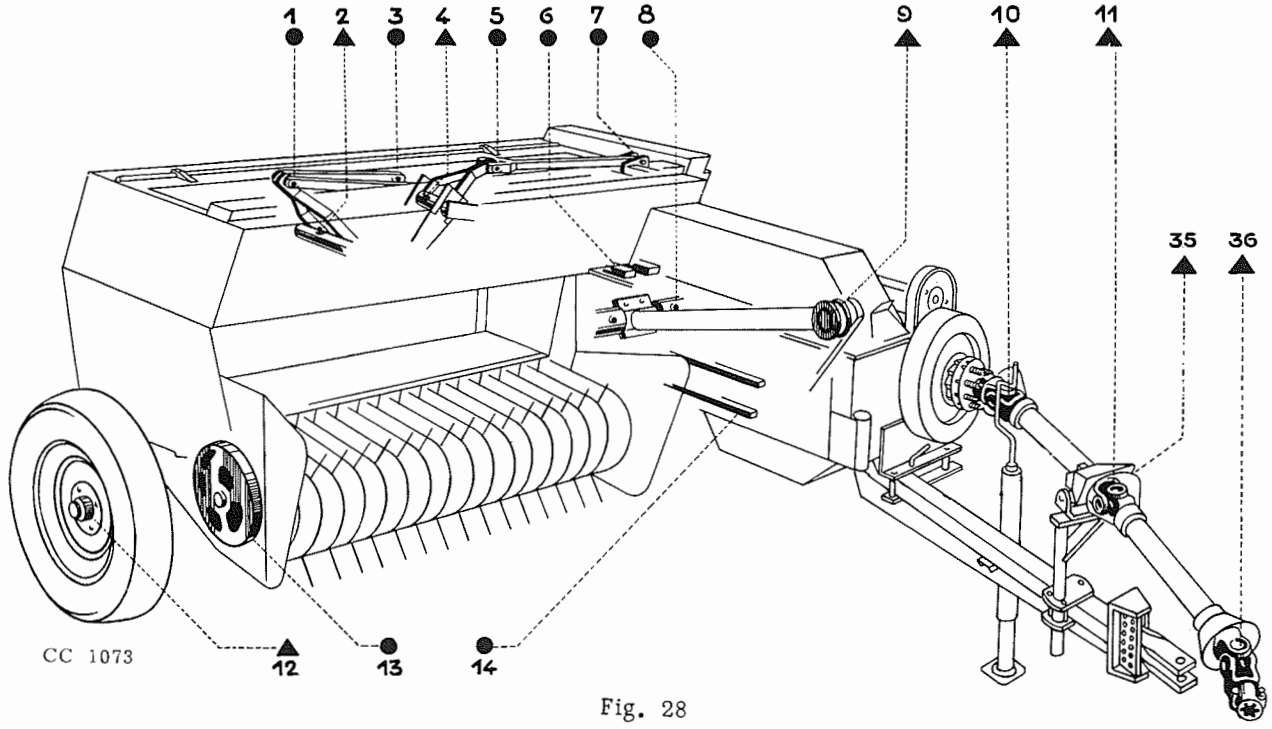

Fig. 28

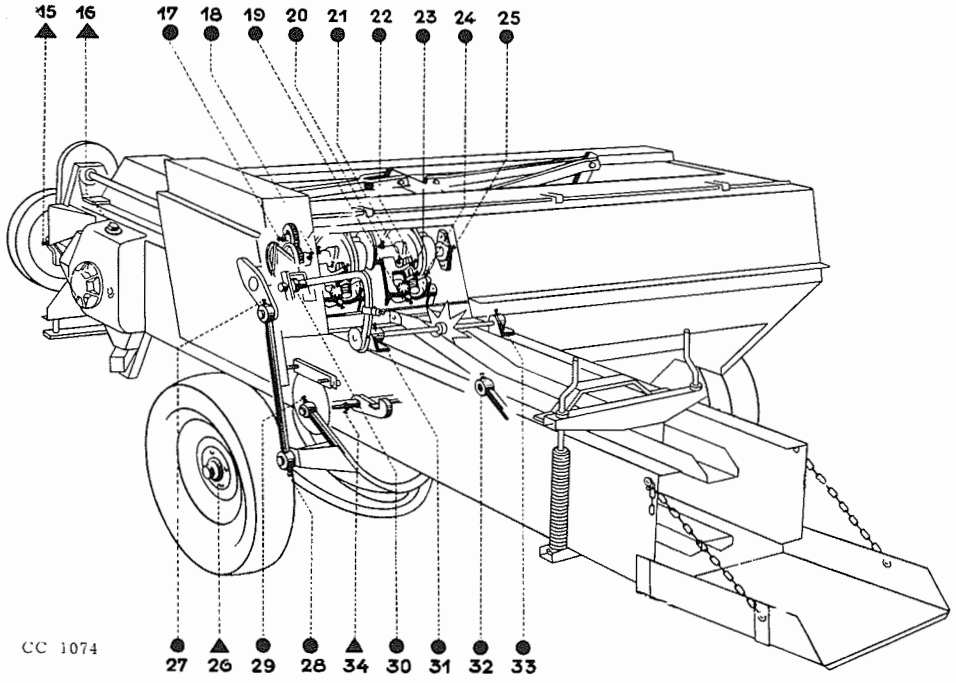

Fig. 29

Service

SERVICE CHECKING

The following outline of related major service checks should all be followed in listed order. This will allow to remedy most tying troubles not solved in the "Trouble Shooting" section. Consider these checks as a service guide to preseasional use.

1) Timing baler
2) Bill hook
3) Knife arm
4) Twine disk
5) Twine holder
6) Needle travel
7) Needle frame adjustment
8) Needle adjustment
9) Tucker fingers

When the complete baler has been lubricated, perform the following checks:

1) Check if the flywheel shear bolt is loose or partly sheared. If necessary, replace the shear bolt and secure bolt in place by tightening the lock nut.

2) Check if plungerhead moves freely, yet fits snug.

3) Make sure that knives are sharp, and lock. When replacing knives, adjust them according to the given instructions in this section.

4) Check pickup drive belt for proper tension.

5) Clean the knotting mechanism frequently. Accumulated trash may cause malfunctions.

6) The baler has five chains:
- The main drive chain underneath the bale chamber
- The knotter drive chain on the baler side
- The feeding system drive chain
- The feeder teeth drive chains (located under the baler cover).

Clean these chains periodically and check them for proper tension. If one of these chains fails, check all timing operations after replacing the chain. For correct adjustment refer to illustrations on page 15.

TIMING THE BALER

ADJUSTING THE PLUNGERHEAD

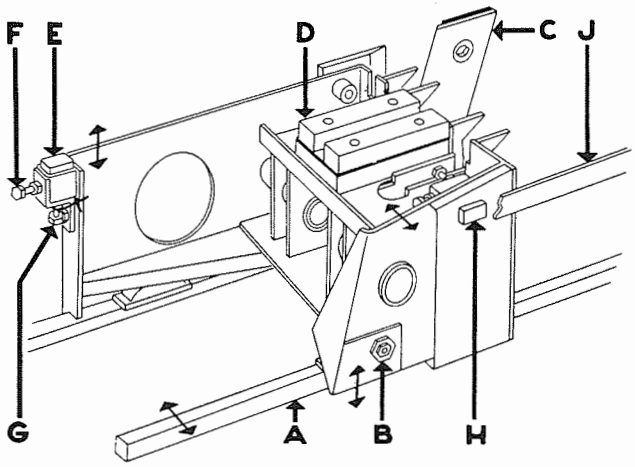

Fig. 30 - Plungerhead details

ADJUSTING BOTTOM OF PLUNGERHEAD

1) Set small guide A snug against bottom wear plates using the three setting screws underneath the bale chamber.

2) An eccentric B is provided to obtain parallel positions of knives.

3) Clearance between knives should be adjusted from 0.027 to 0.047 in. (0.7 to 1.2 mm) by using shims on stationary knife C.

ADJUSTING TOP OF PLUNGERHEAD

1) Use shims at D to set wooden guide pads snug against bale chamber wall.

2) Loosen lock nut on setting screws F and G and raise the wear pad E until it fits snug the plungerhead guide. Use a locking wire to secure screw G.

3) Act the same way when adjusting the wear pad H free from clearance to guide J.

TIMING FEEDING SYSTEM AND FEEDER TEETH TO PLUNGERHEAD

I - Feeder teeth in feeding system

For timing the feeder teeth A and F proceed as follows:

a) Remove roller chain from sprockets P and P1. Rotate flywheel until feeder teeth F enters the feeding chamber. Set teeth tips to 0.8 ± 0.4 in. (20 ±10 mm) distance from chamber top wall.

b) Rotate sprocket P1 of feeder teeth A until feeder teeth A meet teeth F in spot O. For correct adjustment it is important that feeder teeth A are set in setting hole 1.

c) Then try to engage the taut roller chain C on sprocket P and P 1. If the chain does correctly engage on sprockets, the feeder teeth A and F are properly timed.

d) If not, change the position of sprocket P on shaft by 180°. This will alter the chain position by half a pitch.

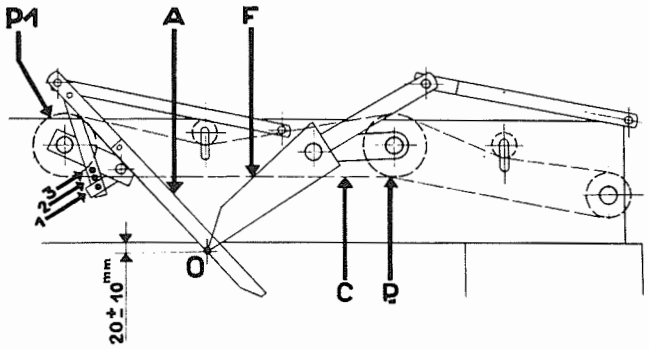

Fig. 31 - Adjust feeder teeth 20 10 mm = 0.8 0.4 in.

II - Feeder teeth to plungerhead

Set tips P of plungerhead flush with the edge of the first tooth slot L pertaining to teeth F. Adjust teeth F to a distance of 8.6 ± 0.2 in. (220 ± 5 mm) from left-hand bale chamber wall C by adjusting the drive gear on front of baler by means of three mounting bolts.

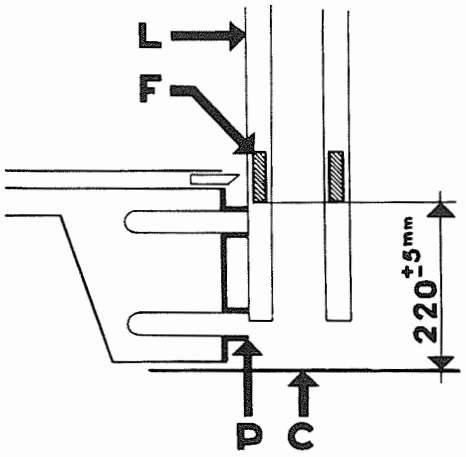

Fig. 32 - Adjusting plungerhead to feeder teeth 220 ± 5 mm = 8.6 ± 0.2 in.

When operating in hay of varied conditions, unfilled spots V in the bale chamber on the side of knives C or on opposite side may result. Therefore, the teeth A are adjustable to produce bales of uniform density under all conditions.

LIGHT CROPS

If the bale is more compressed on the knive's side C, set teeth pivot pin in hole 1 to push the material far enough into the bale chamber.

MEDIUM CROPS

Use set hole 2 to balance the feeding of the bale chamber.

HEAVY CROPS

If bales are more dense on side opposite to knives, set teeth pivot pin in hole 3. Then the teeth stroke will not reach so far into the bale chamber.

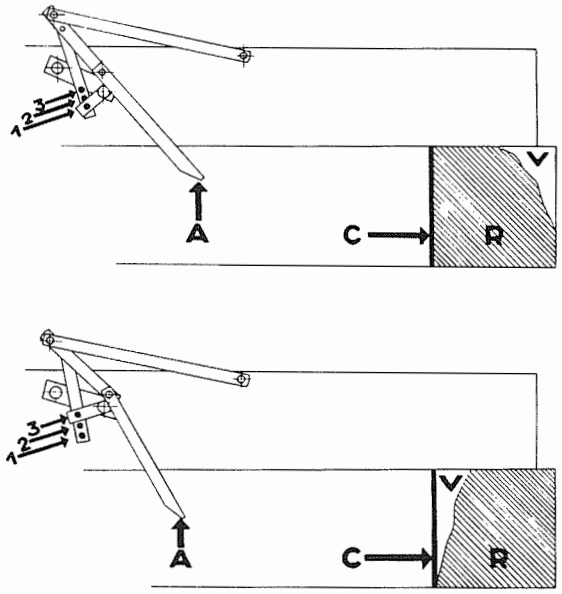

Fig. 33 - Feeding system

NEEDLES

As needles pass through the knotting mechanism, they should clear the closest point to the twine cleaner or twine disk 0.03 to 0.095 in (0.8 to 2.4 mm)

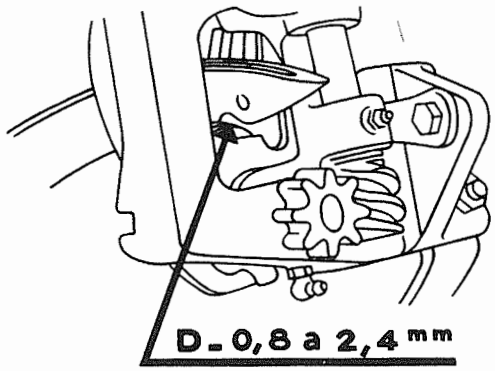

Fig. 34 - Needle passing the knotting mechanism 0.8 to 2.4 mm - 0.03 to 0.095 in.

NOTE

The twine cleaner should move freely through the twine disk and must be in its extreme position when measuring needle clearance.

For adjusting the position of the needles in relation to the twine cleaner, loosen the four needle mounting bolts H slightly, trip the bale measuring arm, rotate flywheel to raise needle frame, and move the needles through the bale chamber. Slide the needles sideways until their right-hand side exert a pressure of 3 to 6 pounds (1.3 to 2.7 kg) against the knotter frame.

Adjust the four needle mounting bolts until the desired clearance is obtained. Tighten needle mounting bolts from 30 to 50 ft.lbs. (4 to 6.8 mkg).

For increasing the distance between the needles and the twine cleaners, loosen the front needle mounting bolts slightly and tighten the rear bolts.

Reverse this procedure to reduce the distance.

When the needles are properly adjusted, tighten all bolts and again check needles through their cycle.

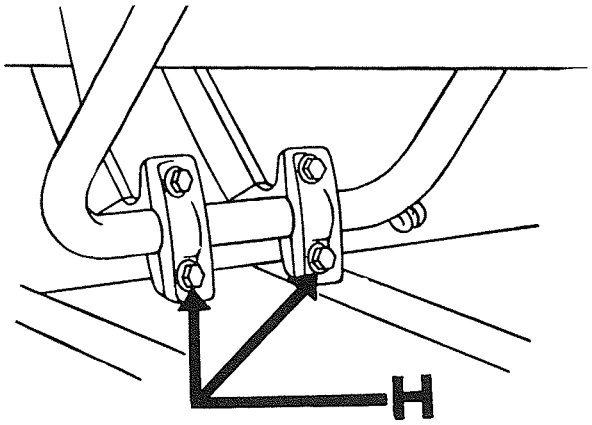

Fig. 35 - Needle mounting bolts

TUCKER FINGERS

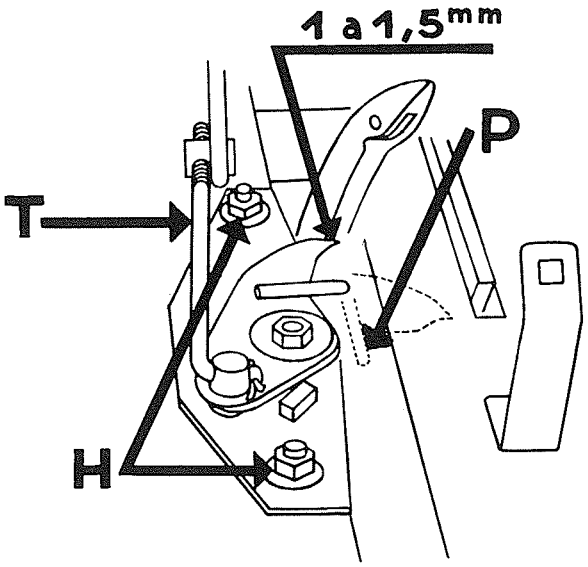

Fig. 36 - Adjusting needles to tucker fingers
1 to 1.5 mm = 0.04 to 0.06 in.

The tucker fingers "catch" the twine, as it is brought to the knotter mechanism by the needles and hold the twine in position for engagement by the bill hooks.

Adjust the tucker fingers as follows:

1) Be sure that needles are in proper adjustment.

2) Trip the bale measuring arm and turn the flywheel by hand until the needles have risen and the tucker fingers are closest to the needles.

3) Loosen the tucker finger mounting bolts H and:

- move the tucker finger foreward or rearward in their mounting slots until the tucker finger clear the needle 0.04 to 0.06 in. (1 to 1.5 mm)

- continue to raise the needles until they reach their dead center position.

- position the tucker fingers by means of link T until their pins P are parallel with edge of needle slots.

NOTE: Perform these adjustments with twine removed from twine holders and needles.

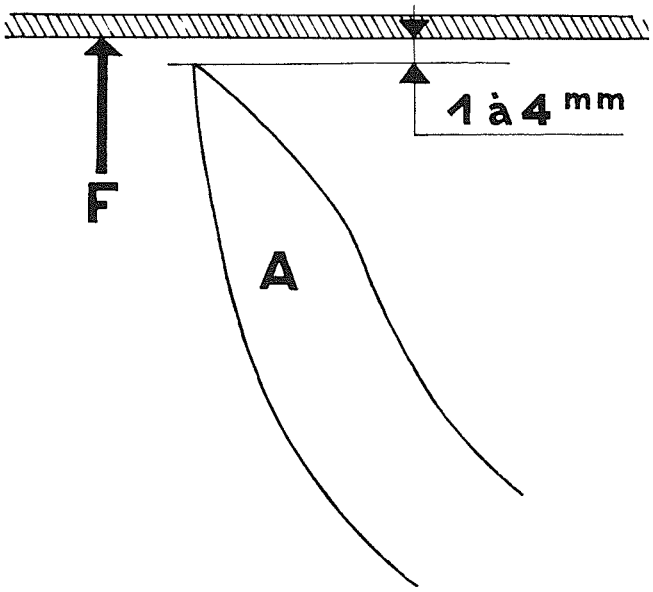

Fig. 37 - Needle in "home" position 1 to 4 mm
= 0.04 to 0.16 in.

The tips of needles brought to "home" position should clear the bottom wall of the bale chamber 0.4 to 0.16in. (1 to 4 mm). Adjust length of needle lift link to obtain this measure.

TIMING NEEDLES TO PLUNGERHEAD

With needle tips being flush with the top edge C of the bale case bottom groove flanges, the distance between tips A of triangles on plungerhead and the needle tip B should be 1.2 ± 0.4 in. (30 ± 10 mm)

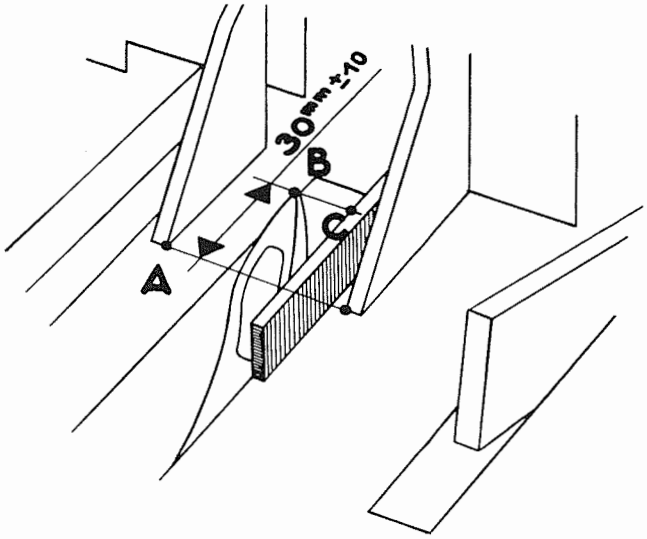

Fig. 38 - Timing needles to plungerhead

CHECKING

1. Trip the bale measuring arm.

2. Turn the flywheel until needles are entering the bale case.

3. When needle tips are flush with the top edge of bale case bottom groove flanges, the distance between needle and tips of plungerhead triangles should measure 1.2 ± 0.4 in. (30 ± 10 mm).

For correcting the distance, remove the three mounting bolts of spur gear C 11416 CX. If one of the bolts is covered by the clutch ring, turn flywheel in opposite sense of normal rotation until the bolt is accessible. Place the plunger head, with bolts removed, within the desired range of the needles which will stay in their initial position. Rotate the gear C 11416 CX to the right until the clutch ring contacts the trip dog roller. Reinstall the three mounting bolts on the gear using three threaded holes aligned with the mounting holes in the gear.

Perform a complete tying cycle by turning the flywheel in normal sense to see if needles are rising during compression stroke of plungerhead and if the measure 1.2 ± 0.4 in. (30 ± 30 mm) is obtained.

PLUNGERHEAD SAFETY STOP

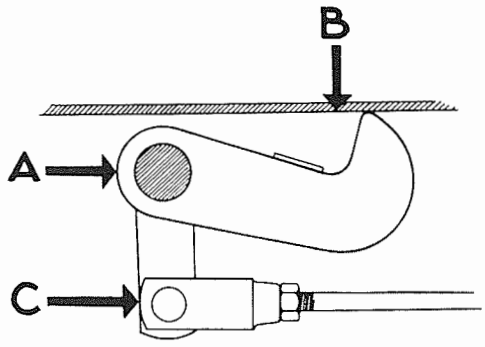

Fig. 39 - Plungerhead safety stop

With needles in "home" position pre-set the plungerhead safety stop A flush with the bottom sheet B of the bale case by adjusting the yoke C.

Trip the needles and turn the flywheel by hand until the needles retract to the home position and the plungerhead safety stop is flush with the bottom sheet of the bale case. At this moment, the clearance of the stopping boss D on plungerhead from safety stop A should be 0.8 in. (20 mm) minimum. Adjust yoke C to correct the clearance.

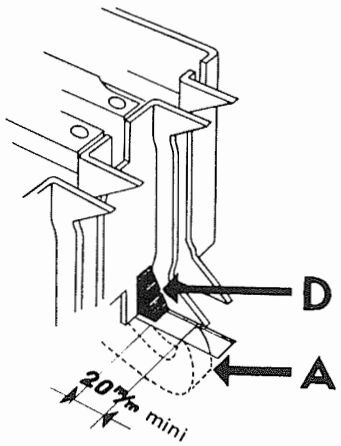

Fig. 40 - Adjusting plungerhead stop 20 mm = 0.8 in.

PICKUP BALANCING SPRING

By means of the pickup lift lever set the pickup cylinder as high as possible to prevent the teeth from touching the ground yet still enabling them to pick up all material. Then adjust spring tension, so that the pickup will raise and lower when contacting unmovable objects.

SAFETY SLIP CLUTCH

Test the slip clutch prior to each baling season for specified slip torque. Testing is also necessary when, during operation, malfunction of the safety slip clutch becomes evident. Adjust static slip torque to 200 ft.lbs. (28 mkg).

Remove cover from clutch and block movement of plungerhead. Attach a lever to drive shaft joint and make slip the clutch two or three times. Loosen jam nuts EP using a pipe wrench and then loosen or tighten all nuts E the same amount to equally alter the tension on all springs. Doing so, use a second wrench to prevent bolts B from turning.

The clutch should slip when a load of 70 lb (28 kg) is applied on the lever at a distance of 3 ft (1 m) from joint center line. After adjusting, tighten the jam nuts EP.

IMPORTANT:

The four driving bolts A should never squeeze the disks AV and AR. Make sure that bolt heads clear the disk AV about 0.02 in. (0.05 mm).

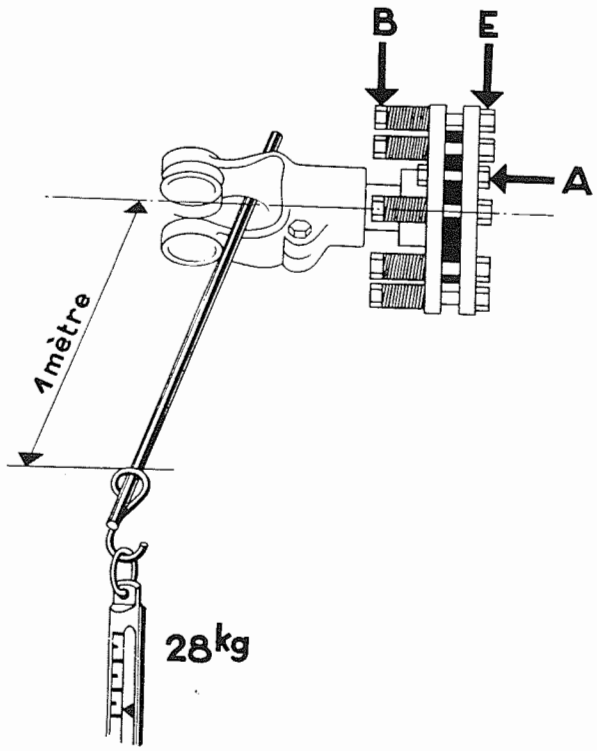

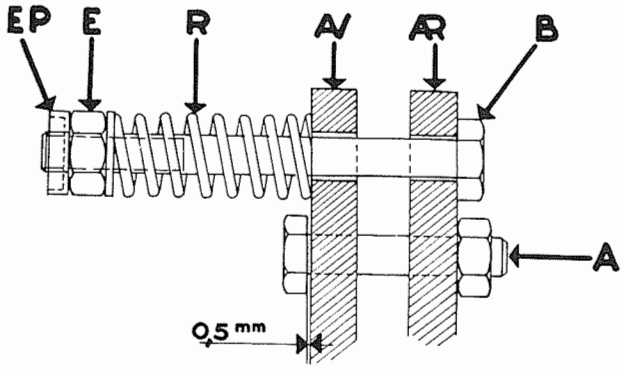

Fig. 41 - Adjusting safety slip clutch
1m x 28 kg = 3ft x 70 lb

KNOTTER GEARS

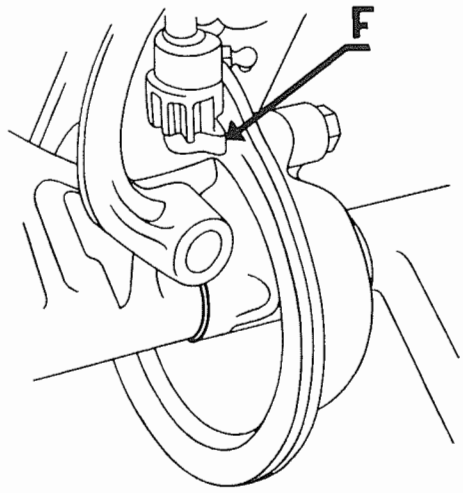

Fig. 42 - Intermittent knotter gear

To help eliminate tooth breakage and to insure proper meshing, the flat side of the bill hook pinion must ride flush with the smooth face of the intermittent knotter gear.

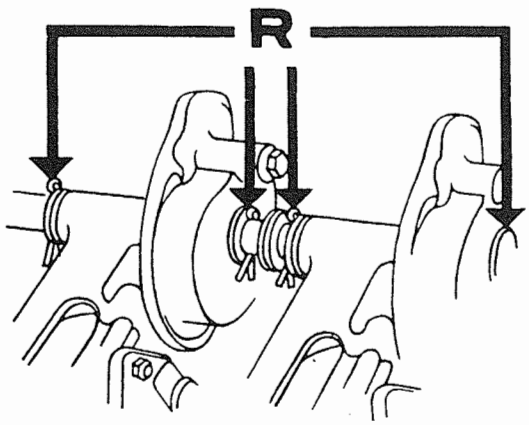

Fig. 43 - Securing the intermittent knotter gear in place

Adjust the intermittent knotter gear flush against bill hook pinion by removing cotter pins and adding washers R between pin hole and gear. Then replace cotter pins.

NOTE: When position of knotter frame was changed, recheck pressure exerted from needle against the knotter frame (see page 16).

BILL HOOK

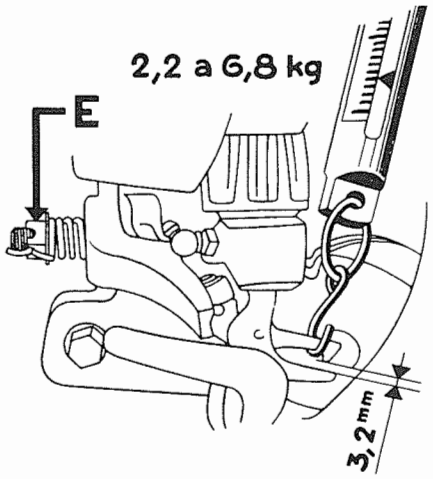

Fig. 44 Adjusting bill hook tongue pressure

The adjustment of the bill hook tongue pressure is extremely important because it is there to form the knot. Make adjustment when the bill hook tongue is free of twine.

The bill hook is in proper adjustment when a pull in upward direction of from 4.84 to 15 lb (2.2 to 6.8 kg) on the bill hook tongue will separate the jaws 0.126 in. (3.2 mm).

The tongue should be tight when it is closed.

For increasing the pressure on the bill hook tongue, tighten nut E on bill hook adjusting stud. Loosen nut for reducing pressure.

Excessive tension on the bill hook tongue may cause knots to remain on bill hook, thus breaking the twine.

Incomplete knots may be the result of insufficient pressure on the bill hook tongue.

KNIFE ARM

Proper knife (wiper) arm adjustment is essential in that the stripping of the knot from the bill hook, once it has been tied, is accomplished by a wiper of the knife arm.

Remove knife arm and sharpen knives, when they become dull and make a ragged cut.

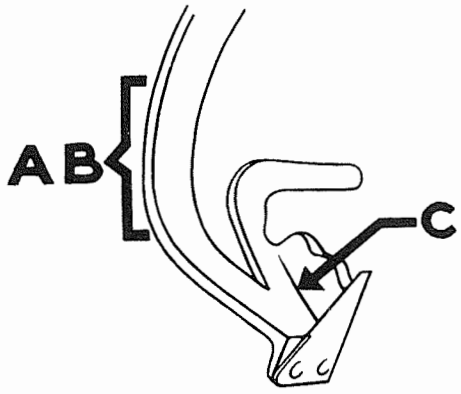

Fig. 45 - Partial view of knife arm

The knife arm is adjusted to the bill hook by modeling or bending the arm in the area AB.

It is not often necessary to remove the knife arm.

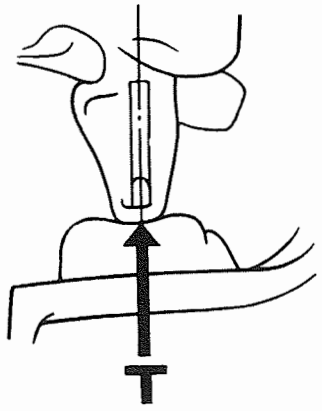

Fig. 46 - Wiping ledge on knife arm

1) The wiper arm ledge must be centered with the bill hook heel T.
2) The bill hook tongue must just clear the wiping ledge on wiper arm by a distance D of 0.031 to 0.09 in. (0.8 to 2.3 mm) as the bill hook tongue passes the wiper arm. Rotate the bill hook 180 degrees and move the tongue by hand up and down to check clearance at the closest point between the tongue and ledge.

3) Between 5 and 10 pounds (2.3 und 4.5 kg) of pressure P is required to pull the wiper arm ledge across the heel of the bill hook.

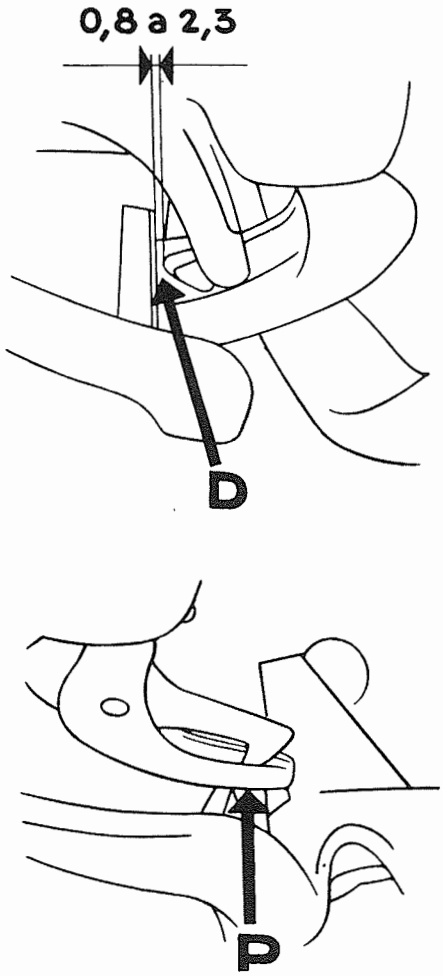

Fig. 47 - Bill hook and wiping ledge

The wiper arm must have well rounded and smooth surfaces L at all portions that contact the twine or knots (particularly in the throat area) to prevent twine fracture.

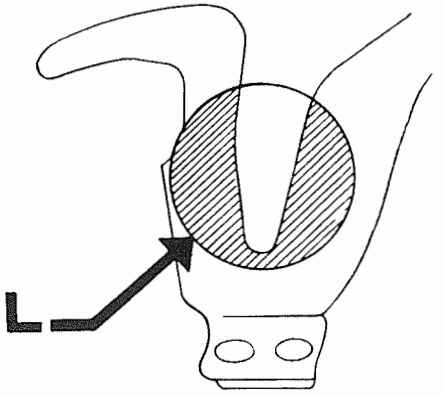

Fig. 48 - Throat area of knife arm

WIPER ARM MODELING TOOL

The wiper arm modeling tool will make it easier and faster to obtain proper adjustment of the twine knotter wiper arm. The wiper arm modeling tool allows ample leverage and at the same time - complete control of the modeling operation..

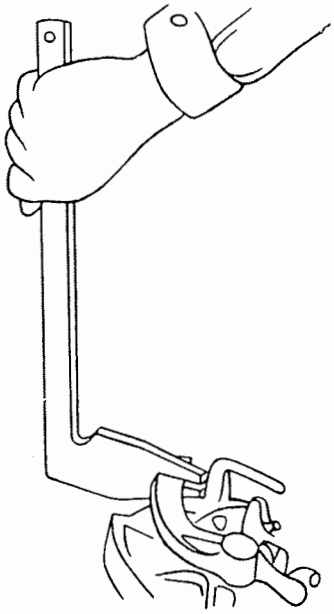

Fig. 49 - Modeling the knife

TWINE DISKS

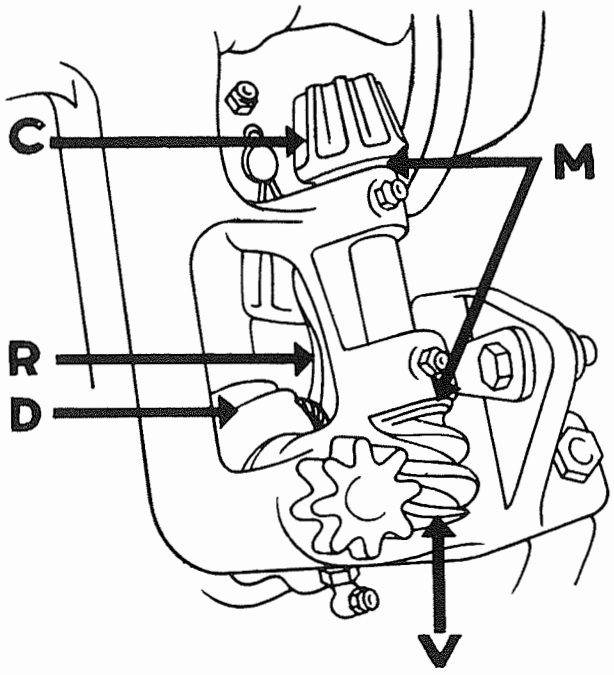

Fig. 50 - Adjustment of twine disks

The adjustment of twine disks is determined by the position of the twine disk notches in relation to the twine holder R. The right-hand corner of the notch in the center plate of twine disks should be flush to 0.063 in. (1.6 mm) to the right side of the left-hand edge of the twine holder when twine is located in twine disk D.

Make this adjustment after tying a minimum of two bales and with twine remaining in the twine disks.

If the twine disk is advanced too far (twine disk notches are then located behind the twine holder), remove knotter disk pinion C and knotter worm V and shift washers from the bottom position to the top position on the worm shaft.

If the twine disk is not advanced far enough (twine disk notches are then located ahead of twine holder), remove knotter disk pinion and knotter worm and shift washers M from the top position to the bottom position on the worm shaft.

Do not allow the right-hand edge of the notch to superpose the left-hand side of the twine holder.

There must be not more than 0.015 in. (0.38 mm) end play in the worm shaft.

TWINE HOLDER

The twine holder holds the twine in the twine disk (while the bale is being formed and the knot is being tied) by the application of pressure on the twine holder. The pressure is regulated by a pressure spring with adjusting screw R.

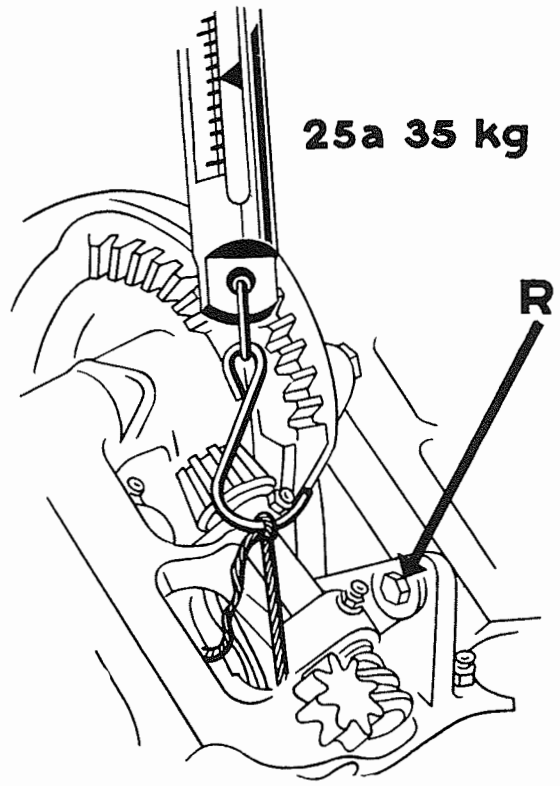

Fig. 51 - Adjusting the twine holder 25 to 35 kg = 55 to 77 lb

In most baling conditions an upward pressure of 55 to 77 lb (25 to 35 kg) - pulling parallel with twine disk - is required to pull the remaining twine out of the holder after a knot has been tied. If the twine pulls free at less than 55 lb (25 kg) loosen the lock nut and tighten the adjusting nut R. If the twine pulls free with more than 77 lb (35 kg) loosen the lock nut and loosen the adjusting nut R. Retighten the lock nut.

ADJUSTING TWINE TENSION DEVICES

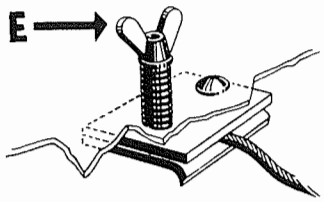

Fig. 52 - Twine tension device

Adjustment of twine tension devices depends upon the kind of twine being used.

The twine tension devices are located inside the lid of the twine box. Adjusting the tension to the desired degree is made by external wing nuts E.

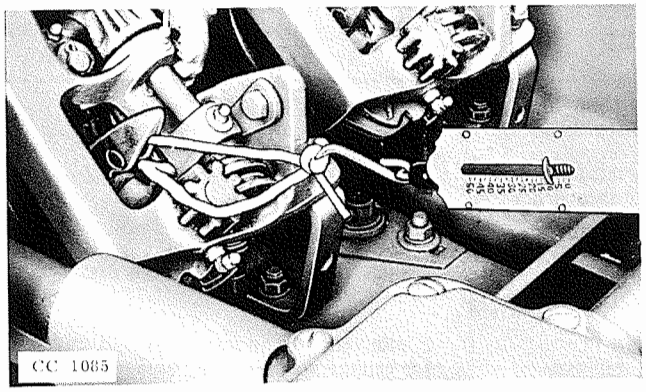

Fig. 53 - Testing the twine tension

To test the twine tension, turn the flywheel until needles are at their uppermost point. Connect scale to twine B from upper side of needle guide. A pull of from 5 to 15 lb (2.25 to 6.75 kg) is required to move twine out of twine box. If the pull is less than 5 lb (2.25 kg) tighten wing nut on twine tension devices, loosen wing nut if the pull is more than 15 lb (6.75 kg).

NOTE

Regulate pressure on twine holder just as necessary to prevent the twine from being pulled out of the holder.

Excessive pressure will cause the twine to break.

Pressure adjustment depends upon crop conditions and moisture content. It may be necessary to increase or decrease the pressure exerted on the twine holder.

NEEDLE BRAKE

The needle brake absorbs the inertia caused by the needle frame notion. Adjust braking action by tightening or loosening the two nuts A.

The required load to move the needle frame out of its vertical position at the point indicated by an arrow should be between 53 and 55 lb (24 and 25 kg).

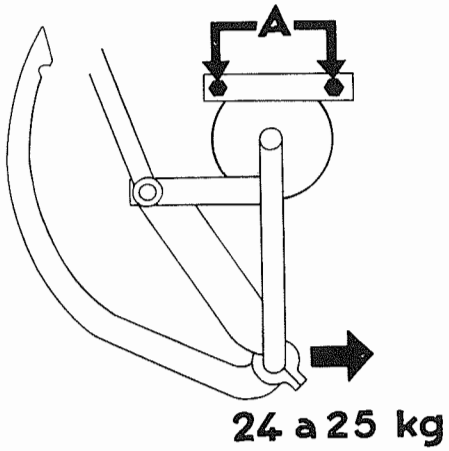

Fig. 54 - Needle brake
24 to 25 kg = 53 to 55 lb.

Trouble Shooting

TROUBLE SHOOTING

Improper adjustments account for most baling difficulties. If you cannot remedy the problem after having checked the following "Trouble Shooting" section, call your John Deere dealer.

NOTE: Defective twine or twine of poor quality is a frequent cause of knotter difficulties.

TROUBLE	POSSIBLE CAUSES	REMEDY
KNOTTER DIFFICULTIES		
Knot in twine over bale 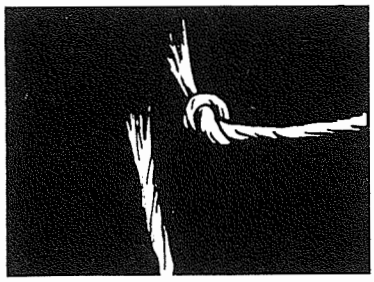	Tucker fingers did not pick up needle twine or move it into tying position properly. Needles did not place twine properly in disk. Hay dogs are not entering the bale case.	Adjust tucker fingers. Adjust needles and/or twine disk. Clean out around hay dogs and examine for broken or unhooked springs.
Twine broken in knot	Extreme tension on twine around bill hook during tying cycle causes twine to shear.	Loosen twine disk holder spring. Smooth all rough surfaces and edges on bill hook.
Knot too loose 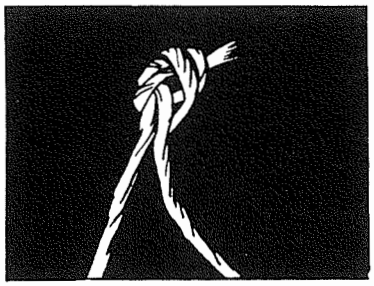 Fig. 55 - 56 - 57	Worn or damaged bill hook tongue. Bale density too low.	Replace bill hook. Tighten bale case tension cranks.

TROUBLE	POSSIBLE CAUSES	REMEDY
Twine ends frayed 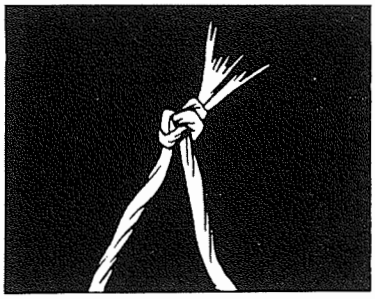	Dull twine knife	Sharpen cutting edge on twine knife
Twine ends uneven 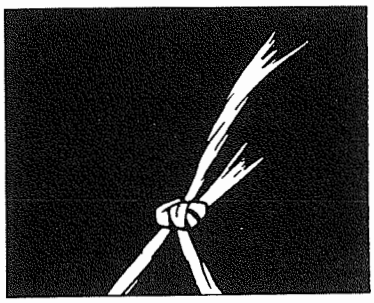	Insufficient tension on twine disk holder. Dull or chipped knife.	Tighten the twine disk holder spring. Sharpen cutting edge on twine knife.
No knot in either twine 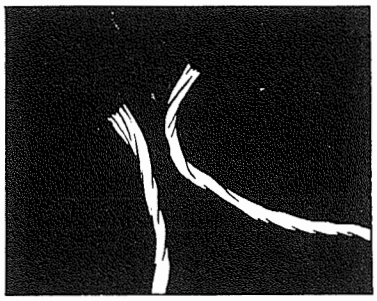	Twine sheared in twine disk. Bill hook not revolving. Bill hook tongue fails to open.	Loosen twine holder and/or remove all sharp edges and burs on twine holder and disks. Check for lost or sheared pin in bill hook pinion. Check for lost bill hook tongue roller, excessive wear on roller and cam face or damaged bill hook tongue.
Single knot in needle twine 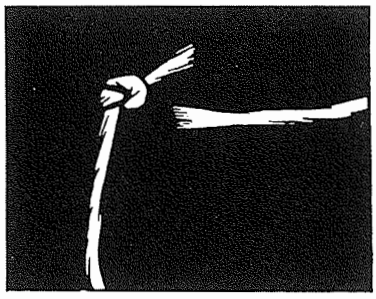 Fig. 58 - 59 - 60 - 61	Twine over bale pulled out of twine disk. (Can be detected by sqare cut end which has been flattened in disks. This twine will usually be shorter than mating twine tied on opposite side of bale.) Twine over bale sheared out of twine disks. (Distinguished from above in that twine end will be frayed and torn.)	Increase tension on twine holder disk spring and/or decrease tension on bale case tension cranks.

TROUBLE	POSSIBLE CAUSES	REMEDY
Strands of one twine doubled back through knot 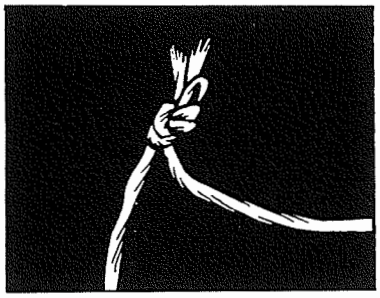	Bill hook tongue is closing on top of one strand of twine.	Install the knife arm in such a position so that groove in knife arm will hold twine over bill hook tongue farther to the right. Adjust timing of twine disks as described on page 20.
Double twine bow knot 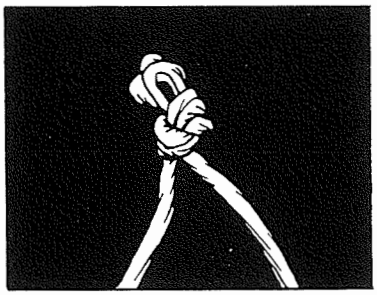	Insufficient travel of knife arm past bill hook. Bill hook pressure arm spring too loose.	Bend knife arm to obtain more travel past bill hook. See page 19. Tighten adjusting nut on bill hook pressure arm spring.
Single twine bow knot 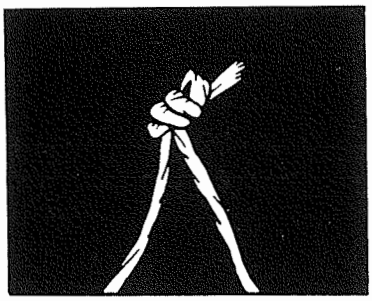	Insufficient travel of knife arm past bill hook. Bill hook pressure arm spring too loose.	Bend knife arm to obtain more travel past bill hook. See page 19. Tighten adjusting nut on bill pressure arm spring.
Twine cut and/or frayed behind knot 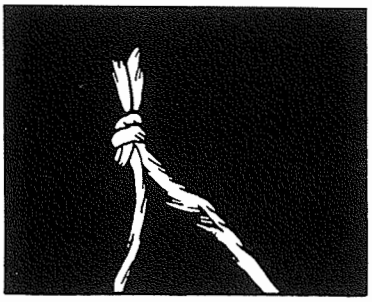	As bill hook turns, twine is pinched between bill hook and knife arm and twine is damaged 0.5 to 1" (12 to 25 mm) from knot. Rough knife arm cuts twine 0.75 to 1.25 in. (18 to 30 mm) from knot. Extremely high needle twine tension.	Bend knife arm so that bill hook turns freely. Make sure that wiper ledge on knife arm contacts heel of bill hook. Smooth off rough edge in throat area of knife arm. Reduce bale weight by loosening tension cranks and/or check twine tension.

Fig. 62 - 63 - 64 - 65

TROUBLE	POSSIBLE CAUSES	REMEDY
Needle twine over bill hook tongue roller 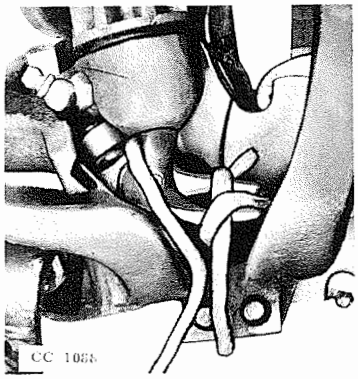 CC 1065	Needle did not place the twine into the disk.	Adjust needles as shown on page 16 and/or adjust twine disk timing. Check for sheared or lost pin in twine disk pinion, in disk pinion or in disk worm gear. Make certain that twine, coming from box, is going under twine tension devices on twine box.
	Improper twine tension.	Adjust twine tension as described on page 16.
	Needle twine incorrectly threaded.	Follow instructions given in paragraph "Threading needles" on page 16.
Needle twine over bill hook tongue and second knot tied on bill hook 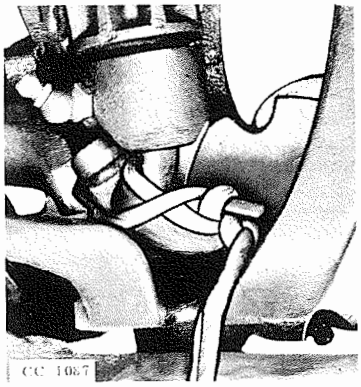 CC 1067	Same cause as for preceding trouble, however, operator will usually find the preceding condition rather than the condition described therein.	Make corrections as noted before. Examine complete knotter for broken or damaged parts.
Needle twine goes under bill hook tongue during first quarter of bill hook travel 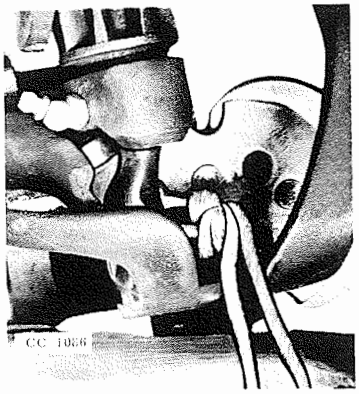 CC 1066 Fig. 66 - 67 - 68	Tucker finger did not "catch" the twine to bring it in proper position for engagement on bill hook.	Adjust tucker fingers as shown on page 16.

TROUBLE	POSSIBLE CAUSES	REMEDY
Knot did not strip off bill hook 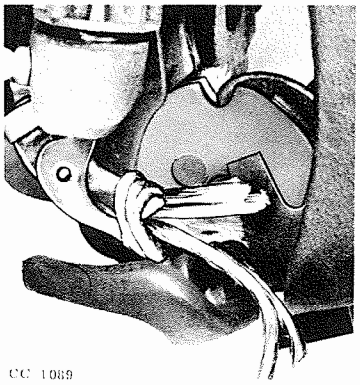 CC 1089	Excessive bill hook tongue tension. Wiper ledge on knife arm is not contacting the heel of bill hook. Knife arm lift is not sufficient. Rough bill hook. Worn or bent bill hook. Bale density too low.	Loosen bill hook pressure arm spring adjusting nut. Bend knife arm so that wiper ledge contacts the heel of the bill hook. Bend upper end of knife arm to increase movement past end of bill hook. Smooth off all rough edges on bill hook with emery cloth. Replace bill hook. Tighten bale tension cranks.
BALE NOT OF PROPER WEIGHT		
Bale too light in weight	Tension cranks too loose.	Tighten tension cranks.
Bale too heavy in weight	Tension cranks too tight.	Loosen tension cranks.
Bale too heavy with cranks screwed out	Hay or straw too wet or too green.	Let hay or straw dry before baling.
Bale too long	Not enough material in top of bale and/or measuring wheel not contacting crop properly.	Tighten tension cranks. If density is correct, adjust bale length.
Bale too short	Bale measuring arm not dropping home.	Adjust bale measuring mechanism.
BALE NOT UNIFORM		
Insufficient bale compression on knives side	Feeder teeth out of adjustment. Plungerhead makes more than 88 strokes per minute.	Set feeder teeth to hole 3. Adjust PTO speed to obtain 88 strokes per minute.
Bale side opposite to knives not sufficiently compressed	Feeder teeth out of adjustment. Plungerhead makes less than 88 strokes per minute.	Set feeder teeth to hole 1. Adjust PTO speed to obtain 88 strokes per minute.
Not enough material in top of bale	Feeder teeth badly worn. Ground speed of baler too low and/or windrow too small.	Replace feeder teeth. Increase ground speed and/or make larger windrows.
Ragged bale	Dull knives. Plungerhead out of adjustment.	Sharpen knives. Adjust as shown on page 14.

TROUBLE	POSSIBLE CAUSES	REMEDY
PICKUP DIFFICULTIES		
Pickup teeth do not revolve.	Pickup drive belt slips.	Tighten belt.
	Pickup lift lever setting too low.	Set lever for more ground clearance.
Not picking up hay perfectly.	Too much "floating" of pickup cylinder.	Adjust pickup balancing spring correctly.
	Pickup teeth bent or broken.	Replace teeth.
	Pickup teeth set too high.	Lower pickup lift lever.
	Ground speed too fast.	Shift to lower gear.
	Hay not all raked.	Turn hay onto next windrow.
	Windrows too light.	Rake heavier windrows.
FEEDING DIFFICULTIES		
Plungerhead hitting feeder teeth at top of case.	Out of time.	Retime baler. See page 15.
Baler stalls when plungerhead is even with rear side of feed opening.	Dull knives and/or plungerhead out of adjustment.	Sharpen knives and/or adjust plungerhead. See page 14.
Baler stalls during compression stroke.	Baling too heavy. Plungerhead obstructed.	Loosen tension cranks. Remove obstruction.
Baler is stalled on end of compression stroke.	Baling too heavy. Plungerhead obstructed.	Turn flywheel in normal sense of rotation two or three revolutions; then engage clutch on tractor. CAUTION: Make sure that needles are in home position before turning flywheel by hand.
SHEAR BOLT DIFFICULTIES		
Flywheel shear bolt frequently sheared.	Foreign obstructing the bale chamber.	Remove objects.
	Baler overcharged.	Loosen tension cranks.
	Shear bolt loose in flywheel.	Replace shear bolt and tighten new bolt properly.
SAFETY SLIP CLUTCH DIFFICULTIES		
Clutch slips during normal operation.	Baling too heavy.	Loosen tension cranks.
	Baler requiring too much power because of: a) dull knives b) excessive clearance between knives c) too low slip torque adjustment.	 Sharpen knives. Adjust plungerhead. See page 14. Adjust to 200 ft.lb (28 mkg) See page 17.
Slip clutch does not absorb sudden shock loads. Shocks are transmitted to tractor engine.	Slip torque adjustment too high.	Adjust to 200 ft.lb. (28 mkg) See page 17.

TROUBLE	POSSIBLE CAUSES	REMEDY
POWERSHAFT DIFFICULTIES		
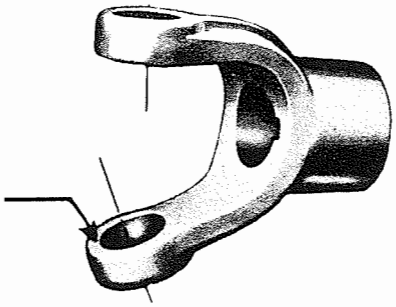 1. Contraction of powershaft in curves. Yoke twisted or broken. Fig. 70 Fig. A.	Telescoping tubular shafts too long. Compressive strain on shaft halves twists or breaks the yoke.	Shorten shafts or increase distance between tractor PTO shaft and hitch pin hole on drawbar.
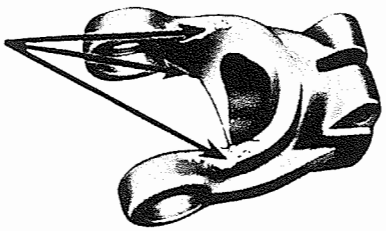 2. Exceeding the turning limit. Impact marks. Fig. 71 Fig.B.	Making sharp turns with tractor PTO shaft engaged.	Disengage tractor PTO shaft during sharp turns. Care for better operator instruction.
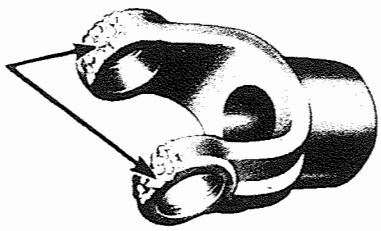 3. Improper installing procedure. U-joint parts damaged by hammer blows. Fig. 72 Fig.C.	Assembling difficulties because of excess paint, rusted or damaged splines.	Remove paint. Clean up and work splines if necessary, before assembling the powershaft.
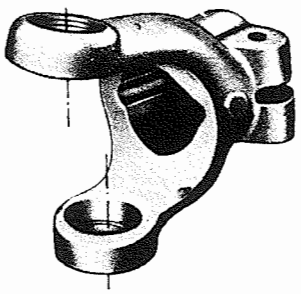 4. Yoke twisted by charging it beyond permissible stress. Bores out of alignment. Fig. 73	Overload due to incorrect tractor operation, rough use of clutch pedal, and starting up abruptly.	Lay stress upon operating the tractor reasonably.

Take strictly note of the informations above.
Parts whose failure is related to improper use are not covered by warranty.

Attachments

BALE COUNTER

The bale counter keeps an exact record of the number of bales baled. The bale counter may be reset to zero.

SIDE-DROP BALE CHUTE

The side-drop bale chute permits discharging of bales to right-hand or left-hand side. Thus, bales are kept out of the tractor tract. This is important, when baling windrows which are closely side by side.

Attach side-drop bale chute in position 1 for right-hand discharging or in position 2 for left-hand discharging. Use three mounting bolts for assembling the side-drop bale chute to bracket T on outlet of bale case in position 1 or 2.

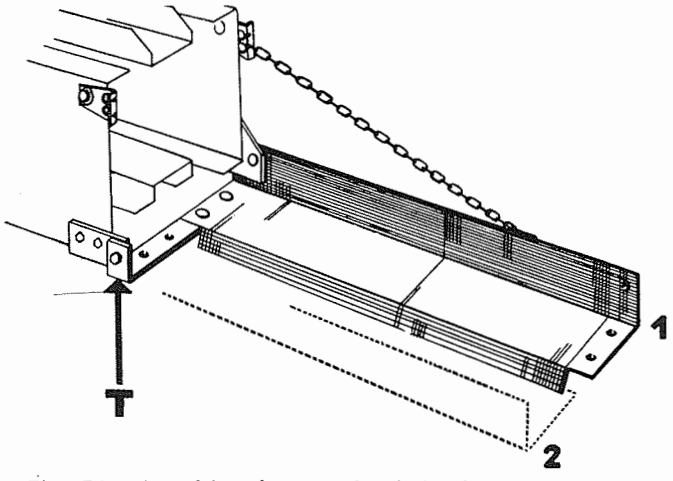

Fig. 74 - Attaching the side-dop bale chute

BALE CHUTE

This attachment permits loading bales directly from the baler to a wagon or a trailer, eliminating the jof ob picking up bales. Attach chute (P) and extension (S) to bale case outlet as shown in fig. 75. Use chains for height adjustment.

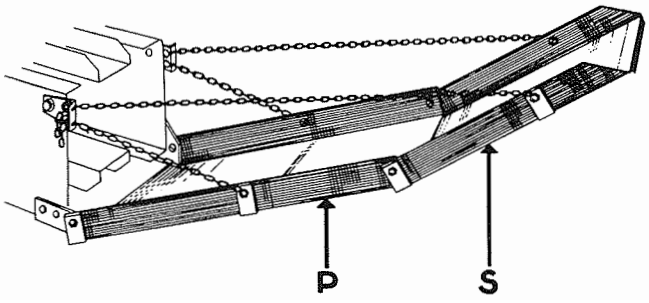

SHORT HAY EQUIPMENT

Lateral sweeper shields, adjustable in height, help to pick up light and short material.

Assemble shields to pickup as follows:

1. Right-hand side: Use stud (1), bolts (5) and (6) spacers (3) and (4) and special screw (2) to attach shield (D), pipe (t) and stripper (r).

2. Left-hand side: Use stud (1), bolt (8), spacer (7) with two screws to attach shield (G) and stripper (r). Adjust ground clearance of strippers (r) by means of bolts (9).

When baling extreme short hay, it is recommended to lower the compressor (f) by reversing bracket position H to position B.

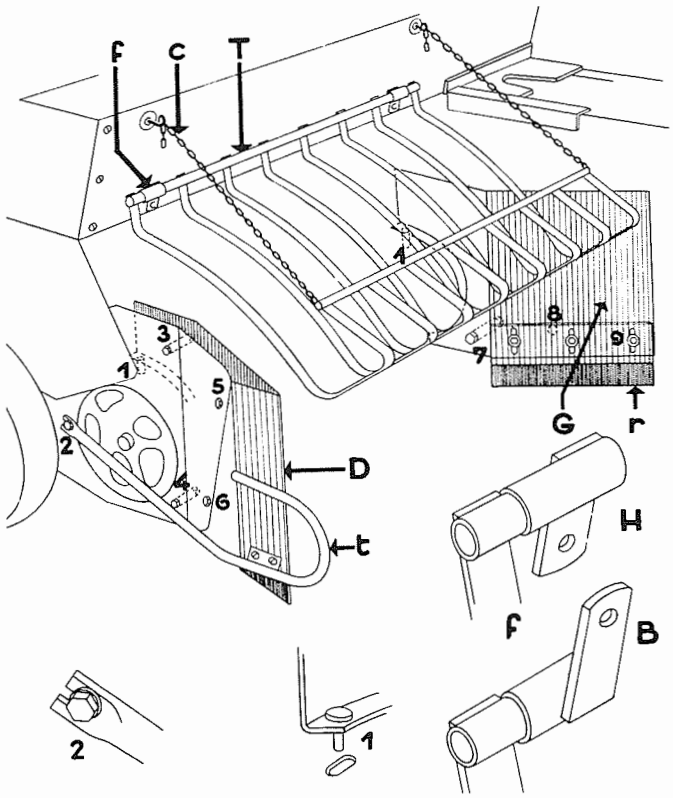

Fig. 76 - Short hay-equipment

PICKUP GAUGE WHEEL

The pickup gauge wheel will allow the pickup to follow ground contour more evenly, when operating in rough conditions. This improves the pickup action. The wheel can be mounted in two positions. Grease wheel hub every week at least.

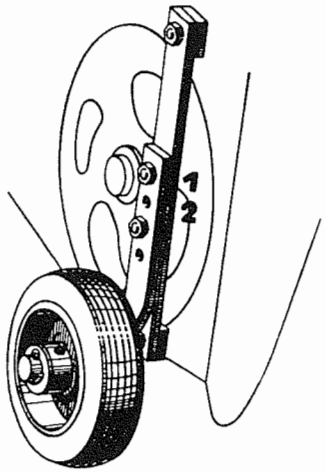

Fig. 77 - Installing the gauge wheel

HIGH-LOADING BALE CHUTE

Bolt chain hooks 1 and mounting brackets 2 to bale case. Assemble chute to brackets by means of pivot pin 3. Secure pin with spring locking pin 4.

1) Hook upper chains 5 at hooks 1. Arrange chain crosswise and thread chain through eyes 6. Hook S-shaped chain hooks to chain links suiting the desired height.

2) Hook lower chain 7 at hooks 8. Thread chain through eyes 9 and hook chain to suitable links.

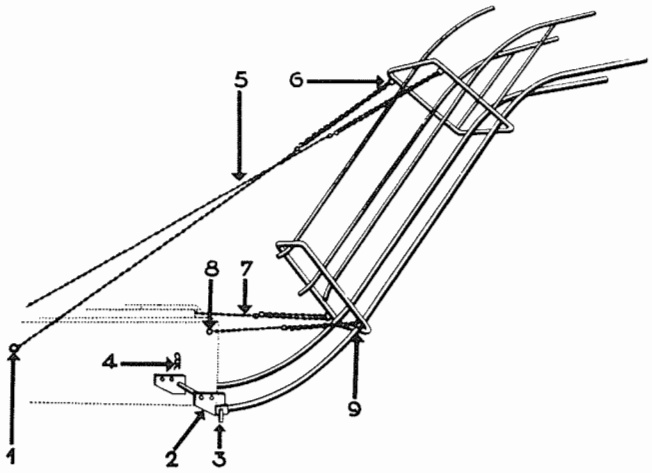

Fig. 78 - High-loading bale chute

MOUNTING PARTS FOR INSTALLING BALE EJECTOR (221 BALER)

Install ejector drive shaft with two bolts B. Do not tighten the bolts. Use spacing washers R to align sprocket on ejector drive shaft with sprocket driving the feeder teeth. Install roller chain C and tighten chain by means of adjusting screw T. Tighten bolts B.

Refer to operator's manual furnished along with the attachment for details related to installing the No. 2 ejector.

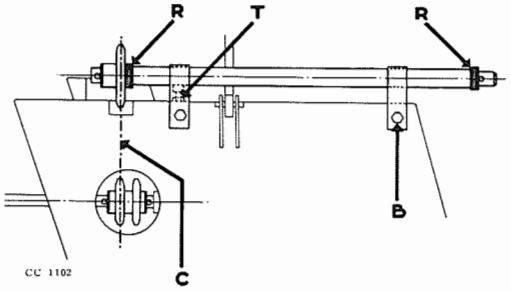

Fig. 79 - Drive shaft of bale ejector

WAGON HITCH (221 BALER)

Attach wagon hitch by means of bolts A, B, C and D. The drawbar can be used in two positions: 1) "T" for operating, 2) "R" for transporting. Pin F secures the drawbar in these positions. Drawbar length is adjustable by setting the pin E in one of the holes 1, 2 or 3.

NOTE: Reversing the drawbar will lower the hitching height.

Bracket extensions P are provided for use of other attachments like the high-loading bale chute.

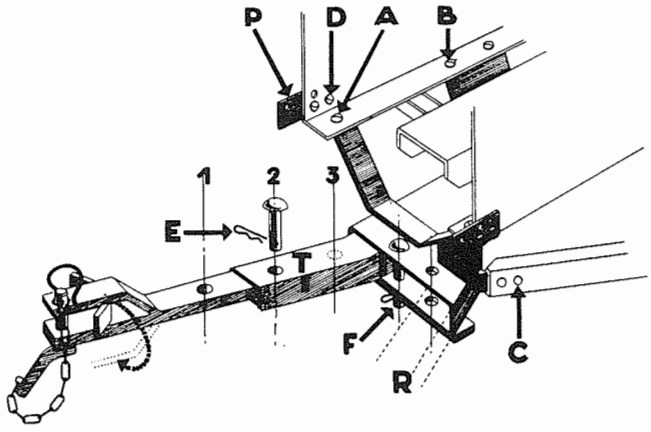

Fig. 80 - Installing and adjusting the wagon hitch.

WAGON HITCH (219 BALERS)

Attach wagon hitch by means of bolts A, B, C and D. Slide drawbar E in or out to desired length and secure with pin F and spring locking pin G.

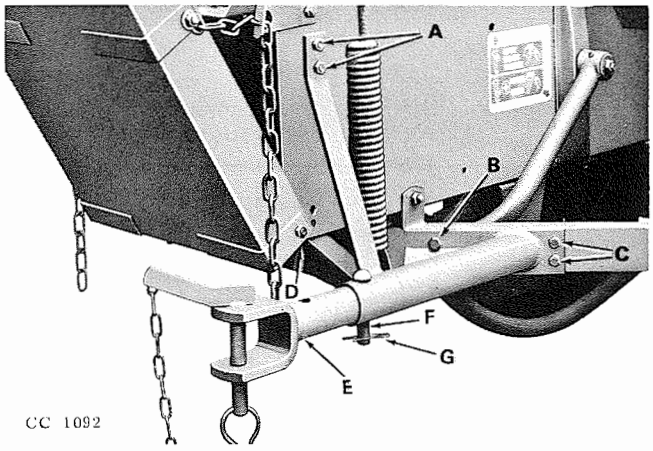

Fig. 81 - Installing and adjusting the wagon hitch

TONGUE ADAPTER

The tongue adapter fits all standard swinging drawbars on tractors and permits to make sharper turns by providing better operating conditions for the powershaft.

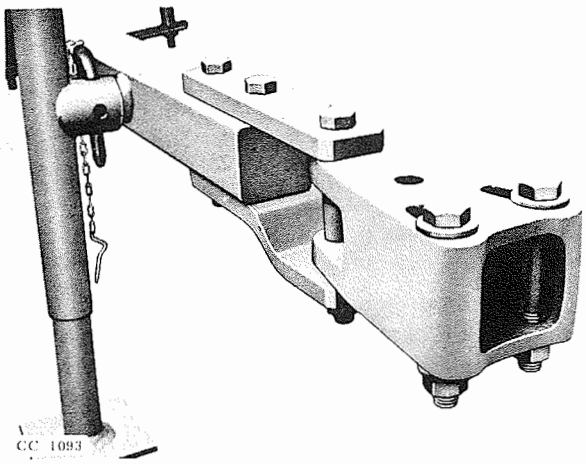

Fig. 82 - Tongue adapter

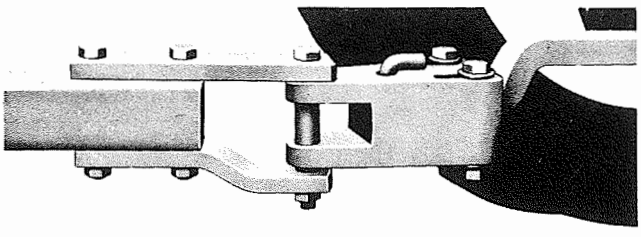

Fig. 82a - Tongue adapter

HEMP BALING EQUIPMENT

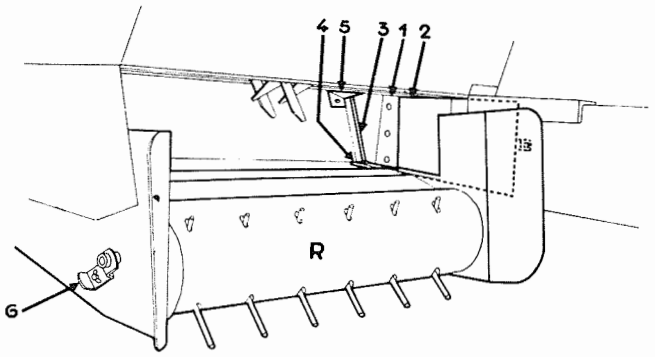

Fig. 83 - Installing the hemp baling equipment

1) Remove pickup for normal use, the stationary knife and the lower plungerhead guide C 11949 CX,

2) Remove knife (1) from plungerhead and place cover plate (2) on plungerhead.

3) Reinstall knife (1) locking the cover plate between knife and plungerhead.

4) Install the special stationary knife (3) and adjust clearance between knife and stationary knife. The clearance should not be less than 0.02 in. (0.5 mm).

5) Install and adjust the new plungerhead guide (4). This guide is shorter than the removed guide C 11949 CX in order to fit the new stationary knife.

The plungerhead knife must slide on this guide which slightly projects on stationary knife. In this way, any interference of the knifes is eliminated.

6) Install the deflection sheet (5) on underside of feeder teeth cover. This sheet helps guiding all erratic hemp stems into the bale case.

7) Install the special pickup (R). Allow the pickup to raise, when contacting unmovable objects by adjusting the balancing spring.

8) Oil pickup fingers to insure their free movement in ball joints.

9) Adjust finger height by means of the lever (6) according to crop conditions.

10) The use of the compressors is absolutely necessary with the hemp equipment.

Specifications

	219	221
Tractor power required	Up from 25 HP	Up from 25 HP
Hitch	Pivotal tongue	Pivotal tongue
Powered	By PTO	By PTO
Powershaft	Shielded U-joints	U-joints plus auxiliary U-joints, shielded
PTO speed	540 r.p.m.	540 r.p.m.
Bale case dimensions:		
Length	5.6 ft. (1.70 m)	6.4 ft. (1.95 m)
Width	1.5 ft. (0.46 m)	1.5 ft. (0.46 m)
Height	1.2 ft. (0.36 m)	1.2 ft. (0.36 m)
Length of bale	1 to 4 ft. (0.3 to 1.2 m)	1 to 4 ft. (0.3 to 1.2 m)
Adjustment of bale length	Automatically by bale measuring wheel	Automatically by bale measuring wheel
Baling capacity	11 tons (10.000 kg)	13.2 tons (12.000 kg)
Feeding System	Timed feeder teeth	Timed feeder teeth
Bale compression	By plungerhead	By plungerhead
Plungerhead speed	88 strokes per minute	88 strokes per minute
Plungerhead stroke	27.5 in. (700 mm)	27.5 in. (700 mm)
Flywheel diameter	21.6 in. (500 mm)	21.6 in. (500 mm)
Number of knotters	2	2
Twine to use	275 to 327 ft. per pound (185 to 220 m/kg)	275 to 327 ft. per pound (185 to 220 m/kg)
Pickup width	4.8 ft. (1.45 m)	4.8 ft. (1.45 m)
Number of teeth rows	4	5
Adjustable pickup height	To 0.4 ft. (0.13 m)	0.4 ft. (0.13 m)
Baler dimensions:		
Length on road	12.9 ft. (3.90 m)	14.4 ft. (4.35 m)
Length in field	15 ft. (4.60 m)	16.8 ft. (5.10 m)
Width	7.6 ft. (2.30 m)	7.66 ft. (2.32 m)
Height	4.3 ft. (1.30 m)	4.3 ft. (1.30 m)
Weight	2400 lb (1090 kg)	2700 lb (1230 kg)
Gear case, oil capacity	8.4 pints (4 liter) SAE 140	8.4 pints (4 liter) SAE 140
Tires:		
L.H.	7.00 x 12 32 psi (2.3 kg/cm^2)	8.50 x 12 28 psi (2 kg/cm^2)
R.H. 28 psi (2 kg/cm^2)	5.50 x 15 28 psi (2 kg/cm^2)	7.00 x 12 18 psi (1.3 kg/cm^2)

Specifications and design are subject to change without notice.

Call on your John Deere dealer if information about availability of equipments in different countries is required.